ROB WALLACE PARK
CABARRUS COUNTY, NORTH CAROLINA

Sheet Title	Sheet No.	Original Date	Latest Revision Date	Revision Number	Revision Note
Cover Sheet	C-0.0	04/20/2016	05/13/2016	1	Developer Revision
Overall Existing Conditions	C-1.0	04/20/2016	05/13/2016	1	Developer Revision
Site Plan	C-2.0	04/20/2016	05/13/2016	1	Developer Revision
Site Staking Plan	C-2.1	04/20/2016	05/13/2016	1	Developer Revision
Landscape Plan	C-3.0	04/20/2016	05/13/2016	1	Developer Revision
Erosion Phase 1 / Clearing	C-4.0	04/20/2016	05/13/2016	1	Developer Revision
Erosion Phase 2 / Grading	C-5.0	04/20/2016	05/13/2016	1	Developer Revision
Post Construction Storm Water Management Plan	C-5.1	04/20/2016	05/13/2016	1	Developer Revision
Drainage Map	C-6.0	04/20/2016	05/13/2016	1	Developer Revision
Road Profile	C-7.0	04/20/2016	05/13/2016	1	Developer Revision
Utility Plan	C-8.0	04/20/2016	05/13/2016	1	Developer Revision
Site Details Sheet 1	C-9.0	04/20/2016	05/13/2016	1	Developer Revision
Site Details Sheet 2	C-9.1	04/20/2016	05/13/2016	1	Developer Revision
Utility Details Sheet 1	C-10.0	04/20/2016	05/13/2016	1	Developer Revision
Erosion / Drainage Details Sheet 1	C-11.0	04/20/2016	05/13/2016	1	Developer Revision
Erosion / Drainage Details Sheet 2	C-11.1	04/20/2016	05/13/2016	1	Developer Revision
Timber Boardwalk Plan	S-1.0	04/20/2016			Original Submittal
Contech Bridge Plan	CT-1	04/20/2016			Original Submittal
Contech Bridge Plan	CT-2	04/20/2016			Original Submittal

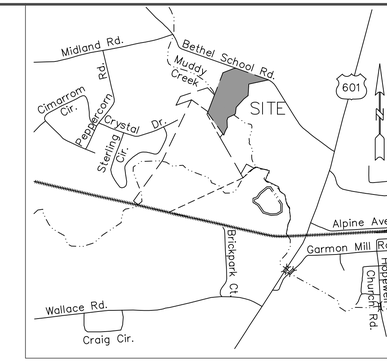

VICINITY MAP
NOT TO SCALE

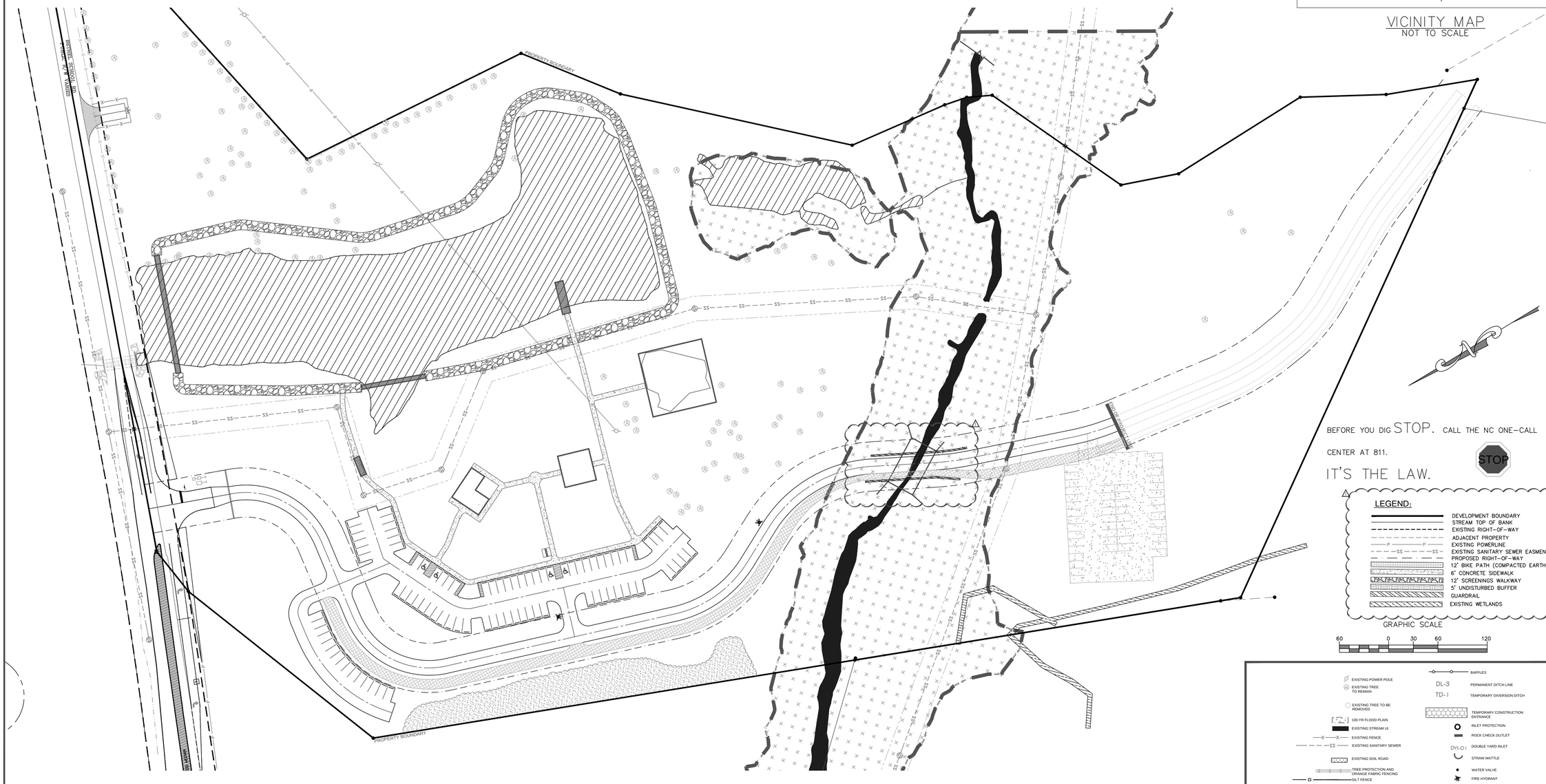

BEFORE YOU DIG STOP. CALL THE NC ONE-CALL CENTER AT 811.

IT'S THE LAW.

STOP

LEGEND:

- DEVELOPMENT BOUNDARY
- STREAM TOP OF BANK
- EXISTING RIGHT-OF-WAY
- ADJACENT PROPERTY
- EXISTING POWERLINE
- EXISTING SANITARY SEWER EASMENT
- PROPOSED RIGHT-OF-WAY
- 12' BIKE PATH (COMPACTED EARTH)
- 6' CONCRETE SIDEWALK
- 12' SCREENINGS WALKWAY
- 5' UNDISTURBED BUFFER
- GUARDRAIL
- EXISTING WETLANDS

GRAPHIC SCALE

60 0 30 60 120

- EXISTING POWER POLE
- EXISTING TREE TO REMAIN
- EXISTING TREE TO BE REMOVED
- 100-YR FLOOD PLAIN
- EXISTING STREAM U.I.
- EXISTING FENCE
- EXISTING SANITARY SEWER
- EXISTING SOIL ROAD
- TREE PROTECTION AND ORANGE FABRIC FENCING
- SILT FENCE
- DOUBLE ROW HIGH HAZARD SILT FENCE
- 12' BIKE PATH (COMPACTED EARTH)
- 6' CONCRETE SIDEWALK
- 12' SCREENINGS WALKWAY
- 5' UNDISTURBED BUFFER
- GUARDRAIL
- F.F.E. FINISH FLOOR ELEVATION
- BAFFLES
- DL-3 PERMANENT DITCH LINE
- TD-1 TEMPORARY DIVERSION DITCH
- TEMPORARY CONSTRUCTION ENTRANCE
- INLET PROTECTION
- ROCK CHECK OUTLET
- DYI-01 DOUBLE YARD INLET
- STRAW WATTLE
- WATER VALVE
- FIRE HYDRANT
- TEMPORARY SILT DITCH
- SANITARY SEWER MANHOLE
- 108 STAKING PLAN (TABLE PROVIDED)
- CP 1 PROPERTY CONTROL POINT
- BM 1 PROPERTY BENCH MARK

COPYRIGHT © 2016, AMICUS PARTNERS, PLLC.
ALL RIGHTS RESERVED. REPRODUCTION OR USE OF THE CONTENTS OF THIS DOCUMENT, OR ADDITIONS OR DELETIONS TO THIS DOCUMENT, IN WHOLE OR IN PART, WITHOUT WRITTEN CONSENT OF AMICUS PARTNERS, IS STRICTLY PROHIBITED. ONLY COPIES FROM THE ORIGINAL OF THIS DOCUMENT, AS APPROVED BY THE ENGINEER SHALL BE CONSIDERED TO BE VALID, TRUE COPIES.

REFERENCE: ALL PARCEL AND BOUNDARY INFORMATION, ADJACENT PROPERTIES, PROPERTY DIMENSIONS, AND COORDINATES REFERENCED FROM A SURVEY COMPLETED BY CESI LAND DEVELOPMENT SERVICES. TOPOGRAPHIC INFORMATION PROVIDED REFERENCED FROM A SURVEY CONDUCTED BY CESI LAND DEVELOPMENT SERVICES. ALL COORDINATES ARE BASED ON LOCALIZED NAD 83(2011); AND VERTICAL DATUMS NAVD 1988.

Amicus Partners, PLLC
Firm License # P-1191
331 Coddle Market Drive
Suite 110
Concord, NC 28027
Civil Site Design
Low Impact Development
Small-Scale Building Design
Telephone: 704.573.1621
Facsimile: 704.248.7951

Seals:

NORTH CAROLINA PROFESSIONAL SEAL 032006 ENGINEER NICHOLAS R. PARKER

05-13-2016

ROB WALLACE PARK
CABARRUS COUNTY, NORTH CAROLINA

FOR
MR. KYLE BILAFER
INFRASTRUCTURE AND ASSET MANAGEMENT
CABARRUS COUNTY GOVERNMENTAL CENTER
PO BOX 707
CONCORD, NC 28026

Project Number:	17-16-010
Date:	△05-13-2016
Drawn By:	CMM
Checked By:	NRP

Revisions:

	04/20/16	Original Submittal
△	05/13/16	Per Developer

Sheet Title:

Cover Sheet

Sheet No:

C-0.0

NOTES:

1. ALL PARCEL AND BOUNDARY INFORMATION FOR THIS PROPERTY AND ADJACENT PROPERTIES REFERENCED FROM A SURVEY COMPLETED BY CESI LAND DEVELOPMENT SERVICES. PROPERTY DIMENSIONS AND COORDINATES REFERENCED FROM A SURVEY COMPLETED BY CESI LAND DEVELOPMENT SERVICES. TOPOGRAPHIC INFORMATION REFERENCED FROM A SURVEY COMPLETED BY CESI LAND DEVELOPMENT SERVICES.

2. THE UTILITIES SHOWN ARE FOR THE CONTRACTOR'S CONVENIENCE ONLY. THERE MAY BE OTHER UTILITIES NOT SHOWN ON THIS PLAN; AMICUS PARTNERS, PLLC ASSUMES NO RESPONSIBILITY FOR THE LOCATIONS SHOWN. THE CONTRACTOR IS RESPONSIBLE FOR LOCATING ALL EXISTING UTILITIES PRIOR TO COMMENCEMENT OF CONSTRUCTION. ANY CONFLICTS CONCERNING UTILITIES THAT ARISE DURING CONSTRUCTION SHOULD BE IMMEDIATELY REPORTED TO THE ENGINEER.

3. THE CONTRACTOR MUST CONTACT THE APPROPRIATE UTILITY COMPANY AT LEAST 48 HOURS PRIOR TO THE BEGINNING OF CONSTRUCTION TO REQUEST THE EXACT FIELD LOCATIONS OF ALL UTILITIES. THE CONTRACTOR IS RESPONSIBLE FOR ANY DAMAGE TO ULTITIES OCCURING DURING CONSTRUCTION AND MUST PROVIDE 48 HOURS NOTICE PRIOR TO THE REPAIR OR REPLACEMENT OF SAID UTILITIES.

4. ANY EROSION AND SEDIMENT CONTROL MEASURES MUST CONFORM TO THE REQUIREMENTS SET FORTH IN THE NORTH CAROLINA EROSION AND SEDIMENT CONTROL MANUAL.

5. THE CONTRACTOR IS RESPONSIBLE FOR ENSURING THAT ALL PERMITS AND APPROVALS HAVE BEEN OBTAINED FROM THE NECESSARY REGULATORY AUTHORITIES PRIOR TO CONSTRUCTION. IN THE EVENT THE CONTRACTOR IS UNCERTAIN ABOUT PERMITTING REQUIREMENTS DURING ANY PHASE OF CONSTRUCTION, THE CONTRACTOR SHOULD IMMEDIATELY CONTACT THE ENGINEER, THE TOWN OF MIDLAND, OR THE CABARRUS COUNTY BUILDING INSPECTIONS DEPARTMENT PRIOR TO PROCEEDING.

6. IF EXISTING CONDITIONS PROVIDED ON THE PLAN DIFFER FROM THOSE AT THE SITE, CONTACT THE ENGINEER BEFORE DEVIATING FROM THE DESIGNED AND APPROVED LAYOUT.

7. THE CONTRACTOR SHALL TAKE MEASURES TO PROTECT ANY ADJACENT PROPERTY, PUBLIC UTILITY, ROADWAY, RAILWAY, AND THE SAFETY OF THE GENERAL PUBLIC. CONTRACTOR IS RESPONSIBLE FOR ANY DAMAGES AND REPERCUSSIONS OCCURING FROM THOSE DAMAGES.

8. NO FORMAL GEOTECHNICAL OR ENVIRONMENTAL INVESTIGATION WAS PERFORMED BY AMICUS PARTNERS, PLLC TO EVALUATE WHETHER OR NOT ANY HAZARDOUS, TOXIC, OR HARMFUL MATERIALS EXIST OR ARE CONTAINED WITHIN THE LIMITS OF THE PROPERTY. AMICUS PARTNERS, PLLC ASSUMES NO RESPONSIBILITY FOR ANY REMEDIAL ACTION THAT MAY ARISE IF SAID MATERIALS ARE DISCOVERED DURING THE COURSE OF CONSTRUCTION NOR IS AMICUS PARTNERS, PLLC LIABLE FOR ANY LEGAL RAMMIFICATIONS THAT MAY ARISE SHOULD AN ENVIRONMENTAL LAW BE VIOLATED BASED ON THE DISCOVERY OF SAID MATERIAL.

9. THE PROPOSED SITE DESIGN FOR THIS PROPERTY IS BASED ON THE INFORMATION PROVIDED BY THE OWNER. IT IS THE RESPONSIBILITY OF DEVELOPER, ARCHITECT, AND/OR CONTRACTOR TO VERIFY THAT THE SURVEY AND OTHER RELEVANT SITE INFORMATION IS CORRECT AND COMPLETE. AMICUS PARTNERS, PLLC ASSUMES NO RESPONSIBILITY FOR COMPLICATIONS DURING PERMITTING AND CONSTRUCTION THAT ARE A RESULT OF INCOMPLETE OR INCORRECT SITE INFORMATION.

BEFORE YOU DIG STOP. CALL THE NC ONE-CALL CENTER AT 811.

IT'S THE LAW.

STOP

LEGEND:

- DEVELOPMENT BOUNDARY
- STREAM TOP OF BANK
- EXISTING RIGHT-OF-WAY
- ADJACENT PROPERTY
- EXISTING POWERLINE
- EXISTING SANITARY SEWER EASMENT
- PROPOSED RIGHT-OF-WAY
- EXISTING WETLANDS
- EXISTING TREE TO REMAIN
- EXISTING TREE TO BE REMOVED

GRAPHIC SCALE

60 0 30 60 120

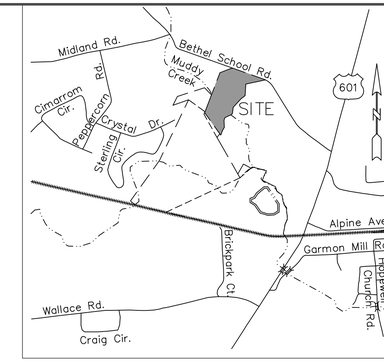

VICINITY MAP
NOT TO SCALE

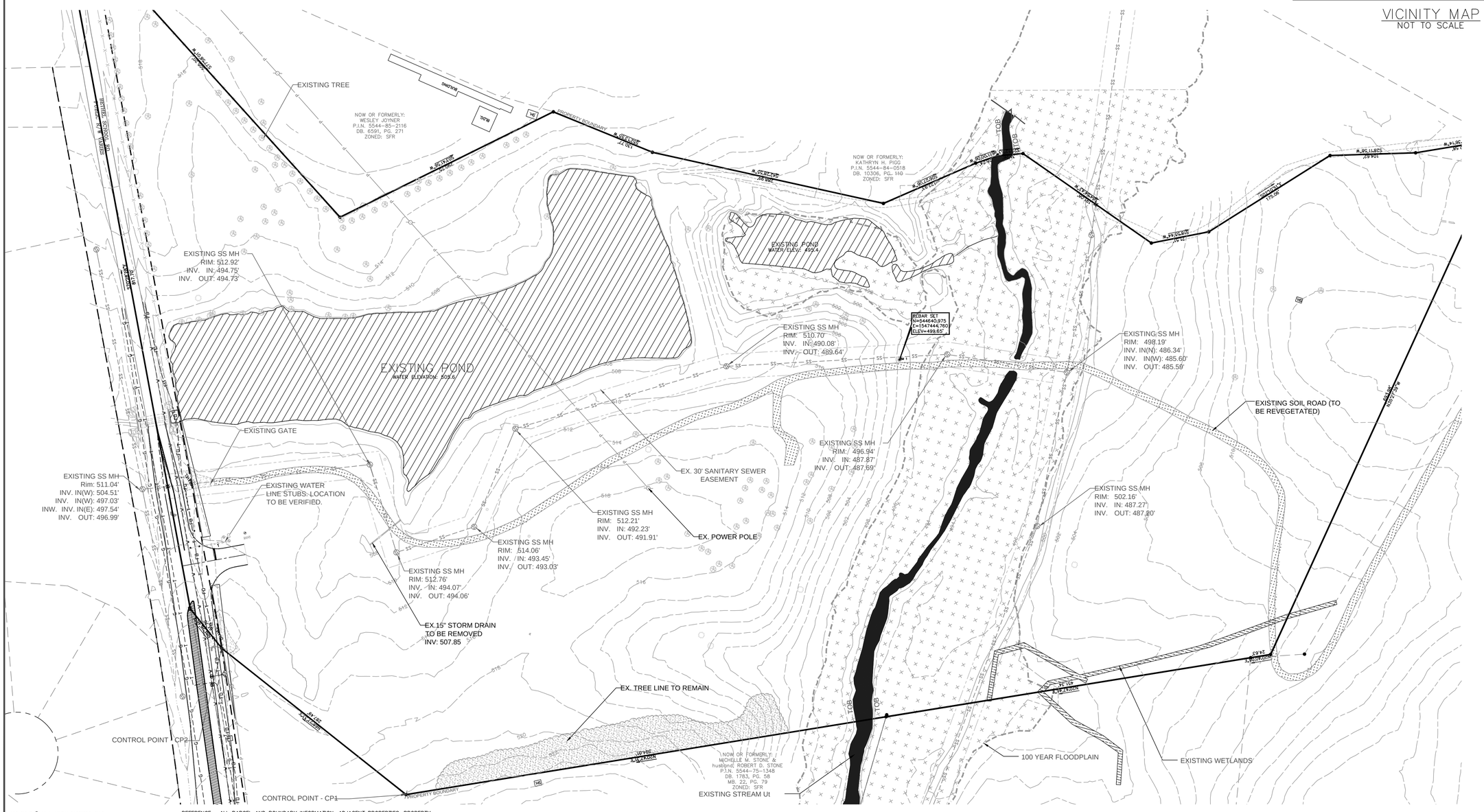

COPYRIGHT © 2016, AMICUS PARTNERS, PLLC.
ALL RIGHTS RESERVED. REPRODUCTION OR USE OF THE CONTENTS OF THIS DOCUMENT, OR ADDITIONS OR DELETIONS TO THIS DOCUMENT, IN WHOLE OR IN PART, WITHOUT WRITTEN CONSENT OF AMICUS PARTNERS, IS STRICTLY PROHIBITED. ONLY COPIES FROM THE ORIGINAL OF THIS DOCUMENT, AS APPROVED BY THE ENGINEER SHALL BE CONSIDERED TO BE VALID, TRUE COPIES.

REFERENCE: ALL PARCEL AND BOUNDARY INFORMATION, ADJACENT PROPERTIES, PROPERTY DIMENSIONS, AND COORDINATES REFERENCED FROM A SURVEY COMPLETED BY CESI LAND DEVELOPMENT SERVICES. TOPOGRAPHIC INFORMATION PROVIDED REFERENCED FROM A SURVEY CONDUCTED BY CESI LAND DEVELOPMENT SERVICES. ALL COORDINATES ARE BASED ON LOCALIZED NAD 83(2011); AND VERTICAL DATUMIS NAVD 1988.

Amicus Partners, PLLC
Firm License # P-1191
331 Coddle Market Drive
Suite 110
Concord, NC 28027
Civil Site Design
Low Impact Development
Small-Scale Building Design
Telephone: 704.573.1621
Facsimile: 704.248.7951

Seals:

NORTH CAROLINA PROFESSIONAL SEAL 032006 ENGINEER NICHOLAS R. PARKER

05-13-2016

ROB WALLACE PARK
CABARRUS COUNTY, NORTH CAROLINA

FOR
MR. KYLE BILAFER
INFRASTRUCTURE AND ASSET MANAGEMENT
CABARRUS COUNTY GOVERNMENTAL CENTER
PO BOX 707
CONCORD, NC 28026

Project Number:	17-16-010
Date:	△ 05-13-2016
Drawn By:	CMM
Checked By:	NRP

Revisions:

	04/20/16	Original Submittal
△	05/13/16	Per Developer

Sheet Title:

Existing Conditions

Sheet No:

C-1.0

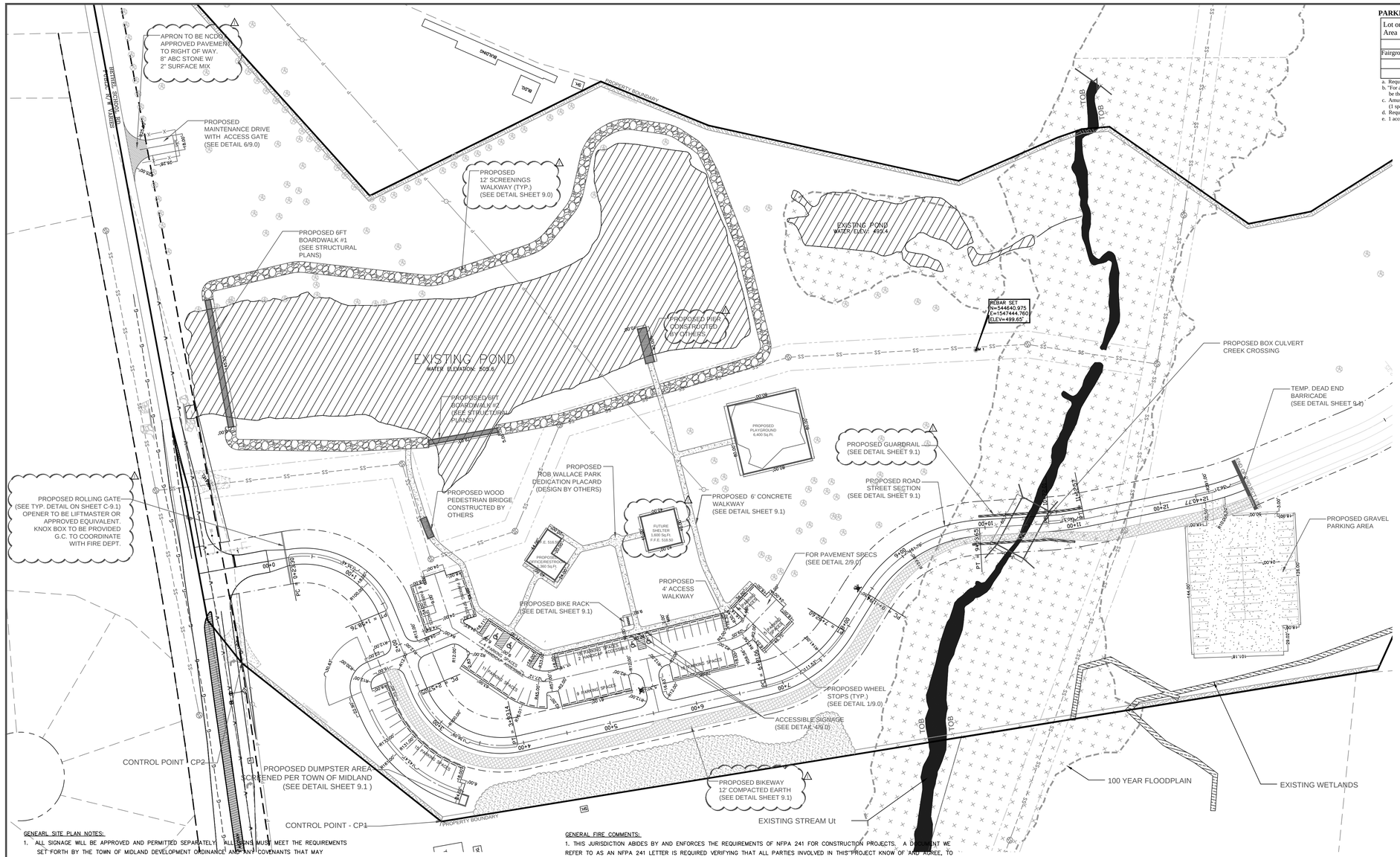

PARKING TABULATION CHART (ACCESSIBLE PARKING INCLUDED)

Lot or Parking Area	Total # of Parking Spaces		# of Accessible Spaces Provided		Total Accessible Provided
	Required	Provided	Regular with 5' Access Aisle	Regular with 8' Access Aisle	
Fairgrounds	24	94	0	4	4

a. Required number of parking spaces based on Town of Midland Zoning Ordinance - Table 12-1.
b. "For any use not specifically listed in this Section, the parking, stacking and loading requirements shall be those of the most similar use." Fairgrounds are considered most similar.
c. Amusement parks, fairgrounds, skating rinks Min. -
(1 space per every 350 sq.ft. of activity space) x (8,400 sq. ft) = 24 parking spaces required.
d. Required number of accessible parking spaces based on North Carolina Building Code Table 1106.1.
e. 1 accessible space with van access per every 1-25 parking spaces.

BICYCLE PARKING SPACES CHART

Total # of Short Term		Total # of Long Term	
Required	Provided	Required	Provided
5	5	0	0

a. Required number of bicycle spaces based on Town of Midland Zoning Ordinance Sec. 12.7
b. 5% of the parking provided for automobiles = 5 spaces required

LANDSCAPE REQUIREMENTS

Type of Yard	Required Plantings	Proposed Conservation Trees Substituted
Parking Lot Yard		
Trees	18	18
Shrubs	102	40
Total	120	58

a. Conservation Trees based on Town of Midland Zoning Ordinance Sec. 11.9-3

PROPOSED BUILDING TABLE

Proposed Building Name	Area SF	Height LF*	Height Stories
Office	940	16	1
Restroom	400	16	1
Shelter	1,600	16	1

* No building to exceed 20' in height.

ZONING CODE SUMMARY
PROJECT NAME: ROB WALLACE PARK
CABARRUS COUNTY, NC
PROPERTY OWNER: NOW OR FORMERLY WALLACE ROBERT L
PARCEL P.I.N. 5544741458
CIVIL PLANS PREPARED BY: AMICUS PARTNERS, PLLC
PHONE: 704-573-1621
ZONING: SFR JURISDICTION: TOWN OF MIDLAND
FLOOD MAP NUMBER AND DATE: 3710554400J, 11/05/2008
STREET YARD: 5 FT
MIN. SIDE YARD (L): 5 FT MIN. SIDE YARD (R): 5 FT
MIN. REAR YARD: 5 FT
PARCEL SIZE: 1,023,964/23.51 +/- SQ. FT/ACRES
PROPOSED USE: PUBLIC PARK
PROPOSED PARKING PROVIDED: 94 SPACES
PROPOSED ACCESSIBLE SPACES PROVIDED: 4 SPACES
AREA OF PROPOSED BUILDING COVERAGE: 3,360 SQ. FT
AREA OF PROPOSED ADDITIONAL STRUCTURAL COVERAGE: 8,246 SQ.FT
TOTAL PROPOSED STRUCTURAL AREA: 11,606 SQ. FT
AREA OF PROPOSED PARKING AND DRIVE COVERAGE: 57,255 SQ.FT
AREA OF PROPOSED GRAVEL PARKING LOT: 19,342 SQ. FT
AREA OF PROPOSED SCREENINGS PATH: 7,976 SQ. FT
AREA OF PROPOSED CONCRETE SIDEWALK COVERAGE: 6,816 SQ.FT
TOTAL PROPOSED IMPERVIOUS AREA: 104,995 SQ.FT
PERCENT IMPERVIOUS AREA: 9.75%

BEFORE YOU DIG STOP. CALL THE NC ONE-CALL CENTER AT 811.
IT'S THE LAW.

LEGEND:

- DEVELOPMENT BOUNDARY
- 5' UNDISTURBED BUFFER / SETBACK
- STREAM TOP OF BANK
- EXISTING RIGHT-OF-WAY
- ADJACENT PROPERTY
- EXISTING POWERLINE
- EXISTING SANITARY SEWER EASMENT
- PROPOSED RIGHT-OF-WAY
- PROPOSED CENTERLINE
- EXISTING WETLANDS
- 12' BIKE PATH (COMPACTED EARTH)
- 6" CONCRETE SIDEWALK
- 12' SCREENINGS WALKWAY
- 5' UNDISTURBED BUFFER
- GUARDRAIL

GENEARL SITE PLAN NOTES:

1. ALL SIGNAGE WILL BE APPROVED AND PERMITTED SEPARATELY. ALL SIGNS MUST MEET THE REQUIREMENTS SET FORTH BY THE TOWN OF MIDLAND DEVELOPMENT ORDINANCE AND ANY COVENANTS THAT MAY APPLY FOR THE AREA.
2. SIDEWALKS SHALL BE CONSTRUCTED OF NOT LESS THAN 4,000 PSI CONCRETE AND SHALL BE 4 INCHES THICK, CONSTRUCTED ON AN ADEQUATELY GRADED BASE, EXCEPT WHERE A SIDEWALK CROSSES A DRIVEWAY IT SHALL BE 6 INCHES THICK. SUBGRADE SHALL BE COMPACTED TO 98% OF THE MAXIMUM DENSITY OBTAINABLE WITH THE MODIFIED PROCTOR TEST. THE SURFACE OF THE SIDEWALK SHALL BE STEEL TROWEL AND LIGHT BROOM FINISH AND CURED WITH AN ACCEPTABLE CURING COMPOUND. TOOLED JOINTS SHALL BE PROVIDED AT INTERVALS OF NOT LESS THAN 5 FEET AND EXPANSION JOINTS AT INTERVALS OF NOT MORE THAN 45 FEET. THE SIDEWALK SHALL HAVE A LATERAL SLOPE OF (1/4) INCH PER FOOT.
3. ALL PARKING SPACES SHALL BE 9 FT WIDE AND 18 FT DEEP. SUBGRADE FOR PARKING LOT AND LOADING AREAS TO BE COMPACTED TO 98% MAXIMUM DENSITY OBTAINABLE WITH A MODIFIED PROCTOR TEST WITHIN THE UPPER 24" AND 95% MAXIMUM DENSITY BELOW 24". SEE DETAILS SHEET FOR PAVEMENT REQUIREMENTS IN LOADING AND PARKING AREAS.
4. ADDRESS MUST BE POSTED IN VISIBLE LOCATION WITH 6-INCH NUMBERS.
5. ALL MEASUREMENTS ARE TAKEN FROM BACK OF CURB, UNLESS OTHERWISE NOTED.
6. TRASH SHALL BE CONTAINED IN DUMPSTER. DUMPSTER PAD SHALL BE 6" CONCRETE REINFORCED WITH WELDED WIRE FABRIC.
7. ALL FIBERGLASS MATS FOR THE TRUNCATED DOMES FOR THE ADA RAMPS SHALL BE RED.
8. REVIEW AND APPROVAL OF THE PLANS DOES NOT RELIEVE THE CONTRACTOR FROM MEETING THE REQUIREMENTS OF THE TOWN OF MIDLAND'S OR CABARRUS COUNTY ORDINANCES, POLICIES, AND STANDARD SPECIFICATIONS, (AS APPLICABLE), CONCORD WATER & SEWER POLICIES AND TECHNICAL SPECIFICATIONS, THE "STANDARD SPECIFICATION FOR WASTEWATER COLLECTION & WASTE DISTRIBUTION FOR CABARRUS COUNTY (WSACC MANUAL) AND ANY OTHER LOCAL, STATE, AND FEDERAL REGULATIONS & APPROVALS."

GENERAL FIRE COMMENTS:

1. THIS JURISDICTION ABIDES BY AND ENFORCES THE REQUIREMENTS OF NFPA 241 FOR CONSTRUCTION PROJECTS. A DEPARTMENT WE REFER TO AS AN NFPA 241 LETTER IS REQUIRED VERIFYING THAT ALL PARTIES INVOLVED IN THIS PROJECT KNOW OF AND AGREE TO ABIDE BY THE PROVISION REQUIRING WATER, HYDRANTS, AND ACCESS ROADS BE IN OPERATION PRIOR TO VERTICAL COMBUSTIBLE CONSTRUCTION.
2. ACCESS AND WATER SUPPLY SHALL BE ESTABLISHED PRIOR TO AND MAINTAINED DURING VERTICAL COMBUSTIBLE CONSTRUCTION. (NFPA 241)
3. NEEDED FIRE FLOW FOR THE STRUCTURE MUST BE PROVIDED AND MAINTAINED.
4. THE SITE ADDRESS SHALL BE POSTED IN A TEMPORARY FORM AND UPON COMPLETION IN A PERMANENT FORM IN A VISIBLE LOCATION IN 6 INCH CHARACTERS IN A REFLECTIVE MATERIAL & CONTRASTING COLOR. (IFC 505.1)
5. APPROVED FIRE APPARATUS ACCESS ROADS SHALL BE PROVIDED FOR EVERY FACILITY OR BUILDING WITHIN THE JURISDICTION. THE FIRE APPARATUS ACCESS SHALL EXTEND TO WITHIN 150 FEET OF ALL PORTIONS OF THE FACILITY AS MEASURED BY AN APPROVED ROUTE AROUND THE EXTERIOR OF THE FACILITY. A GAP OF 300 FEET OF INACCESSIBLE PERIMETER IS ALLOWED. (IFC 503.1.1)
6. ACCESS ROADS TO BUILDING ARE REQUIRED TO BE 20 FEET IN WIDTH FOR BUILDINGS UP TO 30 FEET HIGH AND 26 FEET FOR THOSE OVER 30 FEET. (IFC 503.2.1)
7. FIRE ACCESS ROADS SHALL HAVE UNOBSTRUCTED CLEARANCE OF 13 FOOT 6 INCHES. (IFC 503.2.1)
8. THE REQUIRED TURNING RADIUS OF FIRE ACCESS ROADS SHALL BE 42 FOOT RADIUS. (IFC 503.2.4)
9. DEAD END ACCESS ROADS IN EXCESS OF 150 FEET IN LENGTH SHALL BE PROVIDED WITH AN APPROVED AREA FOR TURNING AROUND FIRE APPARATUS. (IFC 503.2.5)
10. FIRE LANES REQUIRED FOR ACCESS TO THE STRUCTURE ARE REQUIRED TO BE STRIPPED AND MARKED BY SIGNS PROHIBITING PARKING IN AREAS WHERE ACCESS MAY BE BLOCKED. BLOCKAGE TO ACCESS AFTER CONSTRUCTION MAY RESULT IN FUTURE REQUIREMENTS FOR STRIPPING AND SIGNAGE. (CO 6-7) CONTACT CONCORD FIRE MARSHAL'S OFFICE PRIOR TO LANE STRIPPING FOR DETAILS. ALL LANES SHALL BE MARKED IN ACCORDANCE WITH DEPARTMENT SPECIFICATIONS AND APPROVED PRIOR TO INSTALLATION.
11. FIRE HYDRANTS ARE REQUIRED WITHIN 400 FEET OF ANY AREA OF THE PERIMETER OF THE BUILDING AS MEASURED BY AN APPROVED ROUTE AROUND THE EXTERIOR OF THE BUILDING. (C-1)
12. FIRE HYDRANTS -PUBLIC HYDRANTS SHALL BE PAINTED YELLOW AND PRIVATE HYDRANTS SHALL BE PAINTED RED. ALL NEW HYDRANTS SHALL BE EQUIPPED WITH A 5"STORZ FITTING.
13. FIRE DEPARTMENT CONNECTIONS (FDC) SHALL BE PROVIDED FOR SPRINKLER SYSTEMS AND BE REMOTE FROM THE BUILDING WITH SIGNAGE. (IFC 912.1).
14. FIRE HYDRANTS ARE REQUIRED WITHIN 200 FEET OF THE LOCATION OF THE FDC.
15. STRUCTURES UNDER CONSTRUCTION ARE REQUIRED TO HAVE TEMPORARY FIRE EXTINGUISHERS ON SITE DURING CONSTRUCTION.
16. BUILDINGS EXCEEDING THREE STORIES OR 30 FEET IN HEIGHT SHALL HAVE AT LEAST TWO MEANS OF FIRE APPARATUS ACCESS FOR EACH STRUCTURE. (IFC D105.1 & D105.2)
17. BUILDINGS EXCEEDING 62,000 S.F. WITHOUT SPRINKLERS OR 124,000 S.F. WITH SPRINKLERS SHALL HAVE TWO ACCESS ROADS PLACED A DISTANCE APART EQUAL TO NOT LESS THAN ONE HALF OF THE LENGTH OF THE MAXIMUM OVERALL DIAGONAL DIMENSION OF THE PROPERTY OR AREA TO BE SERVED, MEASURED IN A STRAIGHT LINE BETWEEN ACCESSES. (IFC D104.2 & D104.3)

COPYRIGHT © 2016, AMICUS PARTNERS, PLLC.
ALL RIGHTS RESERVED. REPRODUCTION OR USE OF THE CONTENTS OF THIS DOCUMENT, OR ADDITIONS OR DELETIONS TO THIS DOCUMENT, IN WHOLE OR IN PART, WITHOUT WRITTEN CONSENT OF AMICUS PARTNERS, IS STRICTLY PROHIBITED. ONLY COPIES FROM THE ORIGINAL OF THIS DOCUMENT, AS APPROVED BY THE ENGINEER SHALL BE CONSIDERED TO BE VALID, TRUE COPIES.

REFERENCE: ALL PARCEL AND BOUNDARY INFORMATION, ADJACENT PROPERTIES, PROPERTY DIMENSIONS, AND COORDINATES REFERENCED FROM A SURVEY COMPLETED BY CESI LAND DEVELOPMENT SERVICES. TOPOGRAPHIC INFORMATION PROVIDED REFERENCED FROM A SURVEY CONDUCTED BY CESI LAND DEVELOPMENT SERVICES. ALL COORDINATES ARE BASED ON LOCALIZED NAD 83(2011); AND VERTICAL DATUMIS NAVD 1988.

GRAPHIC SCALE
60 0 30 60 120

Amicus Partners, PLLC
Firm License # P-1191
331 Coddle Market Drive
Suite 110
Concord, NC 28027
Civil Site Design
Low Impact Development
Small-Scale Building Design
Telephone: 704.573.1621
Facsimile: 704.248.7951

Seals:

NORTH CAROLINA PROFESSIONAL SEAL 032006 ENGINEER NICHOLAS R. PARKER
05-13-2016

ROB WALLACE PARK
CABARRUS COUNTY, NORTH CAROLINA

FOR
MR. KYLE BILAFER
INFRASTRUCTURE AND ASSET MANAGEMENT
CABARRUS COUNTY GOVERNMENTAL CENTER
PO BOX 707
CONCORD, NC 28026

Project Number: 17-16-010
Date: 05-13-2016
Drawn By: CMM
Checked By: NRP

Revisions:

	04/20/16	Original Submittal
1	05/13/16	Per Developer

Sheet Title:

Site Plan

Sheet No:

C-2.0

Point Table		
Row Description	Northing	Easting
100	545451.3705	1547637.4573
164	545152.9666	1547635.4416
108	544737.8484	1547268.8161
101	545429.4350	1547629.5871
102	545364.0272	1547522.6724
103	545376.5859	1547425.1538
104	545310.5970	1547318.0580
105	545035.5052	1547233.0545
106	544927.3541	1547243.4483
107	544853.8461	1547266.7305
109	544667.7301	1547233.8344
110	544630.2874	1547218.3093
111	544508.7291	1547177.5723
112	544454.2710	1547164.9809
113	544453.0326	1547164.8231
114	544416.2826	1547453.4909
115	544537.8209	1547494.2278
116	544808.8296	1547126.5394
117	544993.8781	1547367.7897
118	545281.2928	1547412.8935
119	545463.2059	1547535.4621
120	545159.6427	1547300.6572
121	545106.4179	1547470.4608
122	545182.1340	1547406.3672
123	545179.7383	1547427.4660
124	545099.6397	1547461.1707
125	545262.4950	1547468.5865
126	545088.9111	1547465.3117
127	545074.4465	1547432.9138
128	545063.1588	1547471.2884
129	545024.7852	1547460.0017
130	545036.0719	1547421.6271
131	544936.7004	1547453.7491
132	544915.6032	1547530.3423
133	544839.0100	1547507.2451
134	544862.1072	1547430.6519
135	544482.8460	1547160.9729
136	544506.5129	1547167.3877
137	544518.0856	1547144.6705
138	544534.1244	1547132.8411
139	544496.3468	1547002.2892
140	544510.2631	1546976.8284
141	544599.4889	1547024.5310
142	544480.3080	1546994.1187
143	545389.1263	1547492.2337
144	545383.8029	1547301.1464
145	544423.1140	1547106.3900
146	544439.1528	1547114.5606
147	544437.7910	1547117.2337
148	544481.6302	1547139.2168

Point Table		
Row Description	Northing	Easting
149	545384.5512	1547308.8376
150	545388.6343	1547313.2356
151	545375.1991	1547325.2140
152	545407.3443	1547429.1484
153	545404.4159	1547451.8576
154	545422.2680	1547454.1598
155	545408.8318	1547464.5265
156	545392.9632	1547462.4801
157	545382.5965	1547449.0439
158	545402.4774	1547292.8546
159	544961.5582	1547614.4575
160	544971.1463	1547617.2978
161	545230.8423	1547171.2963
162	545251.1303	1547383.7954
163	545154.1919	1547633.5941
165	545228.1844	1547665.0032
166	545228.4756	1547660.5591
167	545409.1224	1547788.4432
168	545414.7497	1547790.6236
169	545360.4241	1547925.6066
170	545365.9715	1547927.5809
~~171~~	~~0.0000,0000~~	~~0.0000,0000~~
~~172~~	~~0.0000,0000~~	~~0.0000,0000~~
~~173~~	~~0.0000,0000~~	~~0.0000,0000~~
~~174~~	~~0.0000,0000~~	~~0.0000,0000~~
175	545277.4202	1547412.3941
176	545414.6378	1547454.4882
177	545304.8829	1547460.1962
178	545308.9803	1547468.5431
179	545308.8513	1547527.8631
180	545307.6253	1547533.7866
181	545284.1316	1547528.8629
182	545285.3578	1547522.9895
183	545287.7374	1547519.3118
184	545328.4715	1547531.5709
185	545370.9846	1547468.7204
186	545437.0979	1547432.9855
187	545433.9776	1547457.1892
188	545142.6362	1547475.7559
189	545033.5473	1547347.6435
181	544973.8398	1547283.0328
182	544978.8707	1547300.3153
183	544973.1099	1547301.9923
184	544979.8178	1547325.0358
185	544985.5787	1547323.3588
186	544990.6054	1547340.6427
187	544992.2809	1547346.4040
188	545142.6362	1547475.7559
189	545025.1774	1547330.5881
190	545018.8289	1547270.3349

Point Table		
Row Description	Northing	Easting
191	545023.7236	1547285.7331
192	545047.2888	1547286.7158
193	545053.9230	1547271.9293
194	545122.7239	1547293.1528
195	545119.9265	1547309.0061
196	545135.1833	1547303.1107
197	545139.9281	1547287.1706
198	545152.4743	1547308.1148
199	545157.0557	1547292.7238
200	545162.1273	1547321.3660
201	545168.5465	1547306.6286
202	545246.1075	1547329.9859
203	545243.4760	1547346.0211
204	545252.3560	1547346.5642
205	545261.6810	1547336.2650
206	545321.5584	1547426.0881
207	545022.5850	1547314.5268
208	545311.5569	1547446.5599
209	545320.7943	1547453.1735
210	545351.3081	1547457.1085
211	545349.0060	1547474.9606
212	545295.8785	1547531.3147
213	545248.5148	1547363.3516
214	545266.8679	1547382.7540
215	545048.8247	1547301.7515
216	545020.2421	1547300.7702
217	544976.4638	1547313.5140
218	544926.1687	1547370.2263
219	545227.0664	1547445.6182
220	545184.8761	1547448.3372
221	545226.4315	1547572.1140
222	545277.0262	1547523.7519
223	545260.7204	1547474.6210
224	545251.8636	1547442.9623
225	545245.6945	1547430.3948
226	545225.3433	1547402.5527
227	545228.1650	1547392.9590
228	545234.5015	1547398.6176
229	545133.9246	1547369.4105
230	545120.4935	1547365.4601
231	545038.3501	1547341.3002
232	545136.5161	1547328.8024
233	545134.7195	1547298.8918
234	544859.2828	1547575.4331
235	544850.4271	1547800.3900
236	544879.8650	1547820.5778
237	544979.6375	1547859.7165
238	545011.4503	1547847.0903
239	545110.0785	1547867.6111
240	545278.0317	1547866.7954

Point Table		
Row Description	Northing	Easting
241	545352.3441	1547929.1369
242	545409.2871	1547775.7660
243	545293.0842	1547727.6254
244	545169.4556	1547812.2252
245	545077.2827	1547637.7310
246	544861.9318	1547564.2424
247	544969.3108	1547589.5976
248	544975.2453	1547591.2548
249	545084.4641	1547817.5177
250	545082.3047	1547816.8768
251	545302.9462	1547708.5155
252	545304.0816	1547709.1449
253	545410.3107	1547772.3027
254	545412.3348	1547777.4867
255	545354.6268	1547930.0803
256	545351.6248	1547931.4999
257	545266.2469	1547905.5116
258	545254.0924	1547899.4269
259	545138.1565	1547829.3354
260	545119.7481	1547821.1363
261	545021.1199	1547800.6156
262	544993.9387	1547802.9684
263	544962.1259	1547815.5945
264	544944.6404	1547827.6446
265	544801.0379	1547852.3017
265A	544909.7013	1547847.9203
266	544825.4131	1547832.2039
267	544813.9415	1547817.9007
268	544836.6977	1547568.9400
269	544848.2305	1547572.2556
270	544817.7928	1547678.1283
271	544806.0543	1547675.5278
272	544803.7796	1547766.8320
273	544791.9255	1547764.9667
274	545230.1588	1547657.4873
275	545262.9108	1547533.3664
276	545274.2437	1547582.8375
277	545271.8828	1547553.8062
278	545069.6497	1547449.2230
279	545262.1849	1547529.7300
280	545261.3637	1547520.4829
281	545270.5065	1547476.6642
282	545289.6972	1547470.2145
283	545255.4543	1547441.1997
284	545249.2852	1547428.6322
285	545108.9298	1547454.3625
286	545110.3682	1547457.0297
287	545095.4986	1547450.4422
288	545092.8614	1547451.8808
289	545199.7801	1547492.2743

Point Table		
Row Description	Northing	Easting
290	545168.4028	1547484.8664
291	545151.4493	1547493.7095
292	545160.5897	1547466.9429
293	545160.2623	1547511.6630
294	545154.8763	1547514.3069
295	545132.6902	1547478.1880
296	545140.2104	1547465.8069
297	545205.1462	1547488.6304
298	545025.9456	1547376.9025
299	545022.0747	1547398.5464
300	545031.2475	1547437.9283
301	545019.8150	1547434.6846
302	545020.3614	1547432.7605
303	545018.4374	1547432.2146
304	544981.0168	1547305.1113
305	544889.5927	1547504.5653
306	544889.0468	1547506.4894
307	544885.5607	1547515.5294
308	544886.8631	1547514.1856
309	544887.4090	1547512.2815
310	544928.0181	1547469.1730
311	544928.3803	1547494.9452
312	544978.5650	1547550.7577
313	545008.3877	1547559.2196
314	544976.2072	1547532.1391
315	545150.4477	1547259.1519
316	545164.4729	1547263.4857
317	545174.2233	1547261.2653
318	545143.6496	1547251.8181
319	544871.5732	1547243.7949
320	544743.9065	1547254.8698
321	544636.6759	1547204.9939
322	544514.4487	1547160.5052
323	544456.8233	1547139.0636
324	544915.0872	1547220.5250
325	545043.1811	1547268.2134
326	545318.6786	1547293.3571
327	545402.3854	1547428.5091

Point Table		
Row Description	Northing	Easting
328	545087.9587	1547464.8792
329	545237.8202	1547438.7157
330	545207.8048	1547461.3535
331	545196.8394	1547463.6308
332	545203.0086	1547478.1983
333	545193.2487	1547465.3934
334	545199.4179	1547477.8609
335	545441.4488	1547602.0250
336	545421.1863	1547658.5000
337	545038.2144	1547313.8444
338	545035.5333	1547330.0481
339	545125.7138	1547356.5719
340	545134.3479	1547359.1114
341	545224.4301	1547385.9687
342	545238.1750	1547392.3829
343	545269.4614	1547456.1180
344	545278.7704	1547466.4510
345	545310.6595	1548289.9463
346	545304.6613	1548106.9175
347	545329.7401	1548115.7811
348	545321.4093	1548139.3522
349	545344.9974	1548147.6200
350	545367.7640	1548082.1590
351	545335.4407	1548098.7047
352	545343.7714	1548075.1336
353	544891.8531	1547282.2979
354	544707.0081	1547198.4392
355	544712.0914	1547213.9089
356	544729.9324	1547242.8519
357	544749.3774	1547236.2715
358	544678.1898	1547274.7469
359	544674.7079	1547289.3372
360	544646.5101	1547250.3996
361	544660.3488	1547245.8038
362	544731.4428	1547286.0704
363	544714.5374	1547314.3410
364	545395.0611	1547551.6636
365	545268.5087	1547579.1719

Point Table		
Row Description	Northing	Easting
362	545087.0567	1547454.9792
363	545237.8202	1547438.7157
364	545207.8048	1547461.3535
365	545196.8394	1547463.6308
366	545347.4712	1547486.8621
367	545352.8429	1547445.2070
368	545308.0779	1547434.9339
369	545322.3260	1547441.2721
370	545292.7910	1547467.3342
371	545284.6547	1547450.7594
CP 1	545428.9275	1547285.6247
CP 2	545534.4778	1547553.0305

BEFORE YOU DIG STOP. CALL THE NC ONE-CALL CENTER AT 811.

IT'S THE LAW.

LEGEND:

- DEVELOPMENT BOUNDARY
- STREAM TOP OF BANK
- EXISTING RIGHT-OF-WAY
- ADJACENT PROPERTY
- EXISTING POWERLINE
- EXISTING SANITARY SEWER EASMENT
- PROPOSED RIGHT-OF-WAY
- EXISTING WETLANDS
- 12' BIKE PATH (COMPACTED EARTH)
- 6' CONCRETE SIDEWALK
- 12" SCREENINGS WALKWAY
- 5' UNDISTURBED BUFFER
- GUARDRAIL
- STAKING PLAN (TABLE PROVIDED)
- PROPERTY CONTROL POINT
- PROPERTY BENCH MARK

GRAPHIC SCALE

60 0 30 60 120

COPYRIGHT © 2016, AMICUS PARTNERS, PLLC.
ALL RIGHTS RESERVED. REPRODUCTION OR USE OF THE CONTENTS OF THIS DOCUMENT, OR ADDITIONS OR DELETIONS TO THIS DOCUMENT, IN WHOLE OR IN PART, WITHOUT WRITTEN CONSENT OF AMICUS PARTNERS, IS STRICTLY PROHIBITED. ONLY COPIES FROM THE ORIGINAL OF THIS DOCUMENT, AS APPROVED BY THE ENGINEER SHALL BE CONSIDERED TO BE VALID, TRUE COPIES.

REFERENCE: ALL PARCEL AND BOUNDARY INFORMATION, ADJACENT PROPERTIES, PROPERTY DIMENSIONS, AND COORDINATES REFERENCED FROM A SURVEY COMPLETED BY CESI LAND DEVELOPMENT SERVICES. TOPOGRAPHIC INFORMATION PROVIDED REFERENCED FROM A SURVEY CONDUCTED BY CESI LAND DEVELOPMENT SERVICES. ALL COORDINATES ARE BASED ON LOCALIZED NAD 83(2011); AND VERTICAL DATUMIS NAVD 1988.

Amicus Partners, PLLC

Firm License # P-1191
331 Coddle Market Drive
Suite 110
Concord, NC 28027

Civil Site Design
Low Impact Development
Small-Scale Building Design

Telephone: 704.573.1621
Facsimile: 704.248.7951

Seals:

NORTH CAROLINA PROFESSIONAL SEAL 032006 ENGINEER NICHOLAS R. PAWLIK

05-13-2016

ROB WALLACE PARK
CABARRUS COUNTY, NORTH CAROLINA

FOR
MR. KYLE BILAFER
INFRASTRUCTURE AND ASSET MANAGEMENT
CABARRUS COUNTY GOVERNMENTAL CENTER
PO BOX 707
CONCORD, NC 28026

Project Number: 17-16-010

Date: △05-13-2016

Drawn By: CMM

Checked By: NRP

Revisions:

	04/20/16	Original Submittal
△	05/13/16	Per Developer

Sheet Title:

Site Staking Plan

Sheet No:

C-2.1

11.15. SPECIES SELECTION AND PLANTING TECHNIQUES
IN ORDER TO ENSURE THAT LANDSCAPING REQUIRED BY THIS ARTICLE IS SUITABLE AND IS PLANTED IN THE CORRECT MANNER, THE FOLLOWING SELECTION AND PLANTING TECHNIQUES ARE HEREBY ESTABLISHED.

11.15-1. PLANT SPECIES: SPECIES USED IN REQUIRED PLANTING YARDS AND PARKING LOTS SHALL BE OF A LOCALLY ADAPTED NATURE. OTHER SPECIES MAY BE APPROVED BY THE PLANNING, ZONING AND SUBDIVISION ADMINISTRATOR.

11.15-2. PLANT SIZE: SPECIFIC PLANT SIZES ARE LISTED BELOW:
(A) CANOPY TREE SIZE: WHEN MATURE, A CANOPY TREE SHOULD HAVE A MINIMUM HEIGHT OF FORTY (40) FEET AND HAVE A MINIMUM CROWN WIDTH OF THIRTY (30) FEET. CANOPY TREES MUST BE A MINIMUM OF TWO INCHES IN CALIPER, MEASURED SIX (6) INCHES ABOVE GRADE, WHEN PLANTED.
(B) UNDERSTORY TREE SIZE: WHEN MATURE, AN UNDERSTORY TREE SHOULD HAVE A HEIGHT OF TWENTY-FIVE (25) TO FORTY (40) FEET. UNDERSTORY TREES MUST BE A MINIMUM OF ONE AND ONE HALF (1.5) INCHES IN CALIPER MEASURED SIX (6) INCHES ABOVE GRADE AT THE TIME OF INSTALLATION.
(C) SHRUB SIZE AND TYPE: ALL SHRUBS APPROVED FOR LANDSCAPING OF VEHICLE USE AREAS, LOADING AND UNLOADING AREAS, AND OUTSIDE STORAGE AREAS SHALL BE EVERGREEN, WITH A MINIMUM SIZE OF EIGHTEEN (18) INCHES, SPREAD OR HEIGHT, WHEN INSTALLED AND REACH A MINIMUM HEIGHT OF THIRTY-SIX (36) INCHES AND A MINIMUM SPREAD OF THIRTY INCHES. SUCH SHRUBS SHALL BE PLANTED USING REQUIRED PLANTING TECHNIQUES AND LOCATED PARALLEL TO THE EDGE OF PARKING LOTS, ACCESS DRIVES, LOADING AND UNLOADING AREAS, AND OUTSIDE STORAGE AREAS. REQUIRED SHRUBS IN OTHER LOCATIONS, OUTSIDE OF THE AREAS LISTED ABOVE, MAY BE EVERGREEN OR DECIDUOUS AND SHALL BE THREE (3) GALLON IN SIZE AS PER ANSI STANDARDS AT THE TIME OF INSTALLATION.

11.15-3. PLANTING TECHNIQUES
THE FOLLOWING SOIL PREPARATION TECHNIQUES SHALL BE USED FOR ALL REQUIRED ANDSCAPE AREAS:
(A) SOIL PREPARATION FOR THE ENTIRE LANDSCAPE YARD INCLUDES THE ADDITION OF ORGANIC AMENDMENTS TILLED TO A DEPTH OF EIGHT (8) TO TWELVE (12) INCHES.
(B) ALL PLANTINGS IN LANDSCAPE YARDS SHALL BE MULCHED, INCLUDING INTERIOR PARKING LOT ISLANDS LESS THAN FIVE HUNDRED (500) SQUARE FEET, TO A DEPTH OF THREE TO FOUR (4) INCHES. THE MULCH SHALL BE FREE OF TRASH AND MAINTAINED WEED FREE THEREAFTER.
(C) EARTHEN BASINS (WATER RINGS) ARE TO BE CONSTRUCTED AROUND THE INSTALLED PLANTS AS SHOWN IN FIGURE 2 ABOVE.
(D) PLANTS, AS REQUIRED BY THIS SECTION, ARE TO BE GROUPED TOGETHER WHERE POSSIBLE.
(E) FOR ESTABLISHMENT AND SURVIVAL, PLANTS SHALL BE WATERED BY THE LANDOWNER OR CONTRACTOR FOR THE FIRST YEAR AFTER PLANTING.

11.16. MAINTENANCE OF REGULATED PLANTING SPACES
11.16-1. OWNER RESPONSIBILITY. THE OWNER OR LESSEE OF THE PROPERTY WHERE LANDSCAPING IS REQUIRED SHALL BE RESPONSIBLE FOR THE MAINTENANCE AND PROTECTION OF ALL PLANT AND SCREENING MATERIAL. LANDSCAPED AREAS SHALL BE MAINTAINED IN GOOD CONDITION AND KEPT FREE OF DEBRIS. ANY DEAD, UNHEALTHY, OR MISSING PLANTS
(PRESERVED OR PLANTED) SHALL BE REPLACED WITH NEW PLANT MATERIAL EQUAL TO THE NUMBER OF CREDITED PLANTS PLANTED OR PRESERVED, SUBJECT TO THE PROVISIONS OF THIS ORDINANCE. THE REPLACEMENT PLANT MATERIAL SHALL BE SIZED ACCORDING TO THE REQUIREMENTS OF THIS SECTION AND SHALL CONFORM TO THE INITIAL PLANTING RATES AND
STANDARDS. THE REPLACEMENT PLANT MATERIAL SHALL BE PLANTED WITHIN ONE HUNDRED EIGHTY (180) DAYS OF THE DATE THAT DEAD, UNHEALTHY, OR MISSING PLANTS ARE IDENTIFIED. REGULATED SPACES INCLUDE THOSE PHYSICAL AREAS IN WHICH TREES AND LANDSCAPE MATERIALS ARE REQUIRED BY THIS SECTION.

11.16-2 FAILURE TO MAINTAIN. FAILURE TO MAINTAIN OR REPLACE DEAD, DAMAGED, OR DISEASED MATERIAL OR TO REPAIR A BROKEN FENCE OR WALL (WHERE SUCH FENCE OR WALL IS CONSIDERED A REQUIRED PORTION OF THE LANDSCAPE AS OUTLINED BY THIS SECTION) SHALL CONSTITUTE A VIOLATION OF THIS ORDINANCE AND SHALL BE SUBJECT TO THE PROVISIONS IN SECTION 11.18, ENFORCEMENT, IF NOT REPLACED WITHIN 30 DAYS OF NOTIFICATION.

11.16-3. DESTRUCTION BY NATURAL EVENT. IN THE OCCURRENCE OF A NATURAL EVENT WHICH DESTROYS A LARGE QUANTITY OF VEGETATION, THE OWNER OR LESSEE SHALL HAVE 180 DAYS TO REPLANT. REPLACED PLANT MATERIAL MUST BE IN COMPLIANCE WITH THE MINIMUM SIZE, SPACING AND QUANTITY STANDARDS OF THIS SECTION.

11.16-4. IRRIGATION. IT IS SUGGESTED THAT DRIP IRRIGATION, WHICH INCLUDES DRIP MISTERS, BE USED FOR REQUIRED LANDSCAPING PLANTING BEDS DURING THE REQUIRED ESTABLISHMENT AFTER ESTABLISHMENT, SUPPLEMENTAL WATERING CAN BE REDUCED AND USED ON AN AS NEEDED BASIS. TRADITIONAL SPRAY IRRIGATION IS PROHIBITED EXCEPT FOR TURF AREAS.

11.16-5. PRUNING. ALL REQUIRED TREES SHALL BE ALLOWED TO REACH THEIR MATURE SIZE AND SHALL BE MAINTAINED AT THEIR MATURE SIZE. TRIMMING AND PRUNING SHALL BE DONE IN STRICT ACCORDANCE WITH THE AMERICAN NATIONAL STANDARDS INSTITUTE (ANSI) STANDARDS. TOPPING IS NOT AN ACCEPTABLE PRUNING PRACTICE. TOPPING IS THE REDUCTION OF A TREE'S SIZE USING HEADING CUTS THAT SHORTEN LIMBS OR BRANCHES BACK TO A PREDETERMINED CROWN LIMIT. THE PLANNING, ZONING AND SUBDIVISION ADMINISTRATOR MAY REQUIRE THE REMOVAL AND REPLACEMENT OF ANY TREE(S) LOCATED IN REQUIRED PLANTING YARDS OR TCA'S THAT HAVE BEEN TOPPED OR EXCESSIVELY TRIMMED.

1. CONTACT THE PLANNING DEPARTMENT TO SET UP A PRE-CONSTRUCTION MEETING.
2. ALL TREE PROTECTION DEVICES MUST BE INSTALLED PRIOR TO INSPECTION BY THE PLANNING, ZONING AND SUBDIVISION ADMINISTRATOR AND PRIOR TO ANY TREE DISTURBANCE ACTIVITIES.
3. REMOVAL OR DAMAGE OF TREES IN THE CONSERVATION AREA WILL BE SUBJECT TO THE PENALTIES ESTABLISHED IN THE SECTION 11.18, ENFORCEMENT, OF THIS ORDINANCE.

LANDSCAPE REQUIREMENTS

Type of Yard	Required Plantings	Proposed Conservation Trees Substituted
Parking Lot Yard		
Trees	18	18
Shrubs	102	40
Total	120	58

a. Conservation Trees based on Town of Midland Zoning Ordinance Sec. 11.9-3

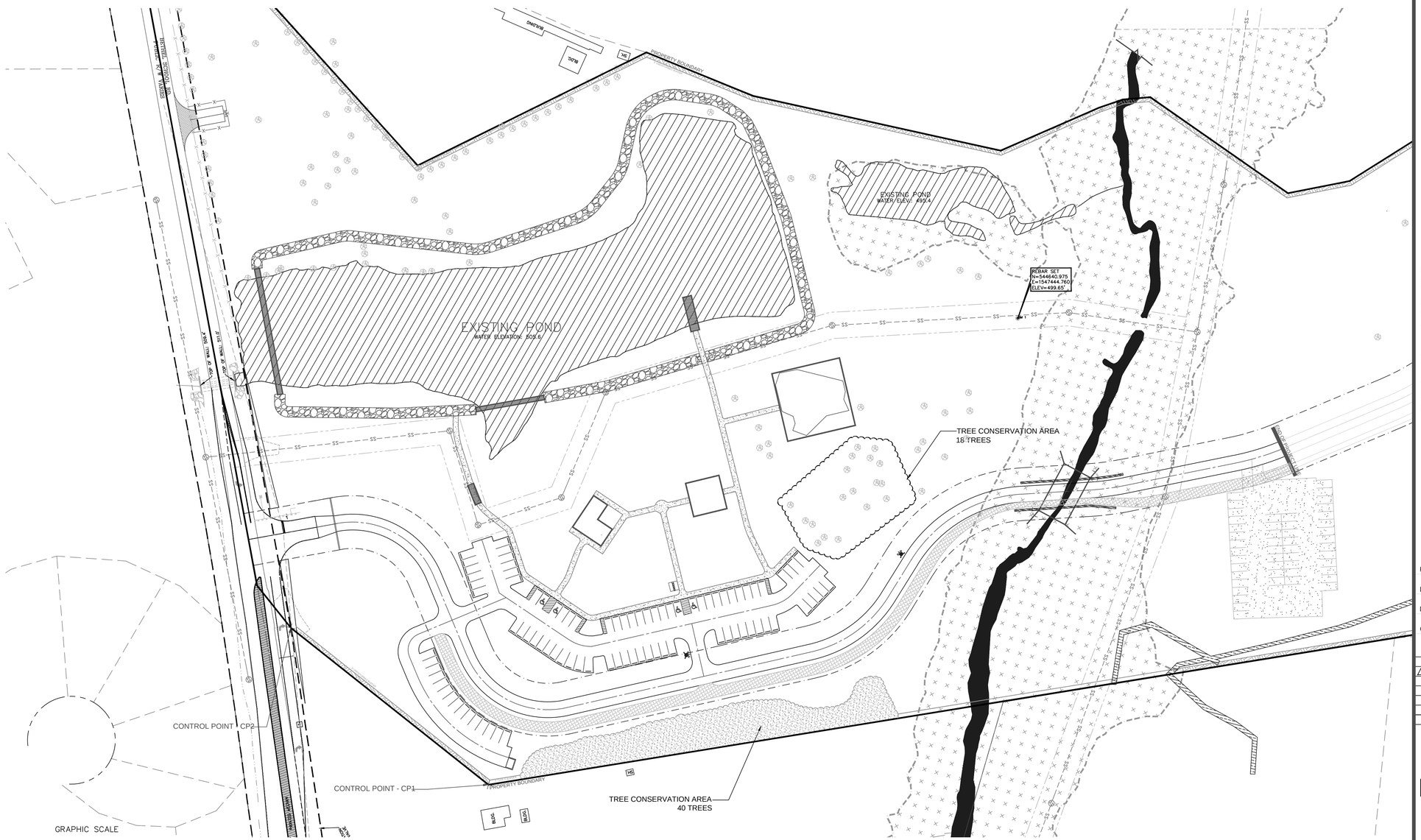

BEFORE YOU DIG STOP. CALL THE NC ONE-CALL CENTER AT 811.
IT'S THE LAW.

LEGEND:
- DEVELOPMENT BOUNDARY
- STREAM TOP OF BANK
- EXISTING RIGHT-OF-WAY
- ADJACENT PROPERTY
- EXISTING POWERLINE
- EXISTING SANITARY SEWER EASMENT
- PROPOSED RIGHT-OF-WAY
- EXISTING WETLANDS
- 12' BIKE PATH (COMPACTED EARTH)
- 6' CONCRETE SIDEWALK
- 12' SCREENINGS WALKWAY
- 5' UNDISTURBED BUFFER
- GUARDRAIL
- EXISTING TREE TO REMAIN

COPYRIGHT © 2016, AMICUS PARTNERS, PLLC.
ALL RIGHTS RESERVED. REPRODUCTION OR USE OF THE CONTENTS OF THIS DOCUMENT, OR ADDITIONS OR DELETIONS TO THIS DOCUMENT, IN WHOLE OR IN PART, WITHOUT WRITTEN CONSENT OF AMICUS PARTNERS, IS STRICTLY PROHIBITED. ONLY COPIES FROM THE ORIGINAL OF THIS DOCUMENT, AS APPROVED BY THE ENGINEER SHALL BE CONSIDERED TO BE VALID, TRUE COPIES.

REFERENCE: ALL PARCEL AND BOUNDARY INFORMATION, ADJACENT PROPERTIES, PROPERTY DIMENSIONS, AND COORDINATES REFERENCED FROM A SURVEY COMPLETED BY CESI LAND DEVELOPMENT SERVICES. TOPOGRAPHIC INFORMATION PROVIDED REFERENCED FROM A SURVEY CONDUCTED BY CESI LAND DEVELOPMENT SERVICES. ALL COORDINATES ARE BASED ON LOCALIZED NAD 83(2011); AND VERTICAL DATUMIS NAVD 1988.

Amicus Partners, PLLC
Firm License # P-1191
331 Coddle Market Drive
Suite 110
Concord, NC 28027
Civil Site Design
Low Impact Development
Small-Scale Building Design
Telephone: 704.573.1621
Facsimile: 704.248.7951

Seals:

NORTH CAROLINA PROFESSIONAL SEAL 032006 ENGINEER NICHOLAS R. PARKER
05-13-2016

ROB WALLACE PARK
CABARRUS COUNTY, NORTH CAROLINA

FOR
MR. KYLE BILAFER
INFRASTRUCTURE AND ASSET MANAGEMENT
CABARRUS COUNTY GOVERNMENTAL CENTER
PO BOX 707
CONCORD, NC 28026

Project Number:	17-16-010
Date:	△05-13-2016
Drawn By:	CMM
Checked By:	NRP

Revisions:

	04/20/16	Original Submittal
△	05/13/16	Per Developer

Sheet Title:

Landscape Plan

Sheet No:

C-3.0

OVERALL CONSTRUCTION SEQUENCE:

1. SETUP AN ON-SITE PRE-CONSTRUCTION CONFERENCE WITH NCDEQ EROSION CONTROL INSPECTOR AND TOWN OF MIDLAND REPRESENTATIVE TO DISCUSS DEVELOPMENT OF ALL PHASES. FAILURE TO SCHEDULE SUCH CONFERENCE 48-HOURS PRIOR TO ANY LAND DISTURBING ACTIVITIES IS A VIOLATION OF LOCAL CODE AND MAY BE SUBJECT TO FINES OR OTHER PENALTIES.

2. SURVEY AND FLAG THE DENUDED LIMITS.

3. REMOVE AND REPLACE UNSUITABLE SOIL. INSTALL CONSTRUCTION ENTRANCE.

4. INSTALL SILT FENCE, SEDIMENT TRAPS, SKIMMER SEDIMENT TRAPS, LEVEL SPREADERS (FOR OFF SITE DRAINAGE SWALES) AND OTHER MEASURES (AS SHOWN ON THIS SHEET). CLEARING ONLY AS NECESSARY TO INSTALL THESE DEVICES.

4A. NOTE: THERE SHALL BE NO CROSSING OF UNNAMED TRIBUTARY TO MUDDY CREEK UNTIL BOTTOMLESS CULVERT IS INSTALLED. ACCESS FOR THE INSTALLATION OF EROSION CONTROL MEASURES ON THE SOUTH SIDE OF STREAM SHALL BE MADE FROM BILL MCGEE ROAD.

5. SEDIMENT TRAPS NEED TO BE STABILIZED IMMEDIATELY AFTER INSTALLATION.

6. CALL FOR ON-SITE INSPECTION BY NCDEQ INSPECTOR. WHEN APPROVED, CONTRACTOR MAY THEN BEGIN CLEARING AND GRUBBING THE REMAINING PORTIONS OF PHASES.

7. GRADE AND INSTALL STORM DRAINAGE SYSTEM AS DEPICTED ON SHEET C-5.0.

8. MAINTAIN EROSION CONTROL DEVICES AS NECESSARY.

9. STABILIZE SITE AS AREAS ARE BROUGHT TO FINISH GRADE. REFER TO DETAIL SHEET C-11.0 FOR SEEDING.

10. CONTRACTOR TO COORDINATE WITH EROSION CONTROL INSPECTOR PRIOR TO REMOVAL OF ANY EROSION CONTROL MEASURES.

EROSION CONTROL NOTES:

1. ALL "REFERENCE" NUMBERS REFER TO DEQ MANUAL UNLESS OTHERWISE NOTED.

2. ON-SITE BURIAL PITS MAY REQUIRE AN ON-SITE DEMOLITION LANDFILL PERMIT FROM THE ZONING ADMINISTRATOR.

3. ANY GRADING BEYOND THE DENUDED LIMITS SHOWN ON THE PLAN IS A VIOLATION OF THE STATE EROSION CONTROL ORDINANCE AND IS SUBJECT TO A FINE.

4. GRADING MORE THAN ONE ACRE WITHOUT AN APPROVED EROSION CONTROL PLAN IS A VIOLATION OF THE COUNTY EROSION CONTROL ORDINANCE AND IS SUBJECT TO A FINE.

5. GROUND STABILIZATION: SEE ADJACENT NEW STABILIZATION TIMEFRAME CHART.

6. ADDITIONAL MEASURES TO CONTROL EROSION AND SEDIMENT MAY BE REQUIRED BY A REPRESENTATIVE OF THE TOWN, COUNTY OR NCDEQ.

7. SLOPES SHALL BE GRADED NO STEEPER THAN 2:1. FILL SLOPES GREATER THAN 10' REQUIRE ADEQUATE TERRACING. EMBANKMENT MATTING MAY BE REQUIRED FOR SLOPES STEEPER THAN 3:1 BASED ON MATERIAL.

8. A GRADING PLAN MUST BE SUBMITTED FOR ANY GRADING EXCEEDING ONE ACRE THAT WAS NOT PREVIOUSLY APPROVED.

9. TEMPORARY DRIVEWAY PERMIT FOR CONSTRUCTION ENTRANCES IN NCDOT RIGHT OF WAY MUST BE PRESENTED AT PRE-CONSTRUCTION MEETING. (IF APPLICABLE)

BOTTOMLESS CULVERT SEQUENCE:

1. CLEARLY FLAG TOP OF BANK (TOB).

2. INSTALL DOUBLE ROW HIGH HAZARD SILT FENCE EACH SIDE OF MUDDY CREEK ALONG TOB. EXTEND A MIN. OF 20' PAST END OF HEADWALLS.

3. PREPARE AND CONSTRUCT FOUNDATIONS FOR CROSSING.

4. SET CROSSING USING CRANE.

5. INSTALL HEADWALLS AND BACKFILL ACCORDING TO DESIGN DOCUMENTS. CARE SHALL BE TAKEN.

6. DOUBLE ROW HIGH HAZARD SILT FENCE SHALL REMAIN UNTIL SITE IS COMPLETELY STABILIZED.

NOTE:
IF THE NEED ARISES FOR ANY OFF-SITE BORROW OR SPOIL SITE DURING CONSTRUCTION, SUBMIT A REVISION THAT DEMONSTRATES EROSION CONTROL FOR THE AREA AND ACCOUNT FOR THE ADDITIONAL ACREAGE IN THE REVIEW FEE OR PROVIDE THE GRADING PERMIT IF THE LOCATION IS ALREADY APPROVED ON SITE.

MAINTENANCE PLAN:
THE FOLLOWING MAINTENANCE PLAN SHALL BE FOLLOWED FOR EROSION AND SEDIMENT CONTROL DEVICES UNTIL THE SITE IS COMPLETELY STABILIZED AND AFTER CONSTRUCTION FOR STORM WATER MANAGEMENT DEVICES THROUGHOUT THE LIFECYCLE OF THE DEVELOPMENT. DURING CONSTRUCTION, THE CONTRACTOR SHALL BE RESPONSIBLE FOR INSPECTION AND MAINTENANCE OF ALL EROSION CONTROL FEATURES. FOLLOWING CONSTRUCTION, THE OWNER/RESPONSIBLE PARTY IS RESPONSIBLE FOR INSPECTION AND MAINTENANCE OF ALL STORM WATER MANAGEMENT FEATURES.

1. ALL EROSION CONTROL MEASURES WILL BE CHECKED FOR STABILITY AND OPERATION FOLLOWING ANY RAINFALL PRODUCING RUNOFF AT LEAST ONCE A WEEK. ANY NEEDED REPAIRS WILL BE MADE IMMEDIATELY SO THAT ALL EROSION CONTROL MEASURES ARE MAINTAINED AS DESIGNED.

2. THE SEDIMENT TRAPS WILL BE CLEANED OUT WHEN THE LEVEL OF SEDIMENT REACHES APPROXIMATELY ONE HALF OF THE TRAP OR BASIN VOLUME.

3. ALL SEEDED AREAS WILL BE FERTILIZED, RESEEDED AS NECESSARY, AND MULCHED ACCORDING TO THE SEEDING SPECIFICATIONS AND THE REMEDIATION PLAN IN ORDER TO MAINTAIN A DENSE VEGETATIVE COVER.

4. ALL SEEDED AREAS WILL BE RE-FERTILIZED IN THE SECOND YEAR UNLESS GROWTH IS FULLY ADEQUATE. GRASSED AREAS WILL BE MOWED AT LEAST ONCE A YEAR.

SELF-INSPECTIONS
EFFECTIVE OCTOBER 1, 2010, PERSONS RESPONSIBLE FOR LAND DISTURBING ACTIVITIES MUST INSPECT THE SEDIMENT AND EROSION CONTROL MEASURES ON A PROJECT AFTER EACH PHASE OF THE PROJECT TO MAKE SURE THAT THE APPROVED EROSION AND SEDIMENTATION PLAN IS BEING FOLLOWED. SELF-INSPECTION REPORTS ARE REQUIRED. A SAMPLE SELF-INSPECTION REPORT, AS WELL AS DETAILS OF THE SELF-INSPECTION PROGRAM, CAN BE FOUND ON THE LAND QUALITY WEB SITE: http://deq.nc.gov/about/divisions/energy-mineral-land-resources/erosion-sediment-control

AS A MINIMUM, THE INSPECTIONS SHALL BE PERFORMED AFTER EACH OF THE FOLLOWING PHASES OF A PLAN:
1. INSTALLATION OF PERIMETER EROSION AND SEDIMENT CONTROL MEASURES.

2. INSTALLATION OF SEDIMENT TRAPS/BASINS.

3. CLEARING AND GRUBBING OF EXISTING GROUND COVER.

4. COMPLETION OF ANY PHASE OF GRADING THAT REQUIRES PROVISION OF STABILIZATION.

5. INSTALLATION OF MEASURES DURING ANY PHASE OF THE PROJECT.

6. COMPLETION OF CONSTRUCTION OR DEVELOPMENT.

7. INSTALLATION OF STORMWATER RETENTION MEASURES.

8. QUARTERLY UNTIL THE ESTABLISHMENT OF PERMANENT GROUND COVER IS FULLY ESTABLISHED.

PLEASE NOTE THESE INSPECTION REQUIREMENTS ARE IN ADDITION TO NPDES INSPECTION REQUIREMENTS. IF YOU HAVE QUESTIONS ABOUT THE SELF-INSPECTION PROGRAM, PLEASE CONTACT US AT (704) 663-1699.

LEGEND:

- DEVELOPMENT BOUNDARY
- STREAM TOP OF BANK
- EXISTING RIGHT-OF-WAY
- EXISTING FENCE
- ADJACENT PROPERTY
- EXISTING POWERLINE
- EXISTING SANITARY SEWER EASMENT
- PROPOSED RIGHT-OF-WAY
- EXISTING TOPOGRAPHY
- PROPOSED GRADE
- EXISTING WETLANDS
- 5' UNDISTURBED BUFFER
- DISTURBED LIMITS
- DRAINAGE AREA
- EXISTING TREE TO REMAIN
- TD-1 TEMPORARY DIVERSION DITCH (SEE DETAIL 3/11.1 FOR SPECIFICATIONS)
- SILT FENCE (SEE DETAIL 1/11.1 FOR SPECIFICATIONS)
- DOUBLE ROW HIGH HAZARD SILT FENCE
- HARDWARE CLOTH & GRAVEL INLET PROTECTION (INSTALL SILT SACKS AFTER PAVING) (SEE DETAIL 5/11.1 FOR SPECIFICATIONS)
- STRAW WATTLE
- ROCK CHECK OUTLET
- BAFFLES
- DL-3 PERMANENT DITCH LINE
- TEMPORARY CONSTRUCTION ENTRANCE

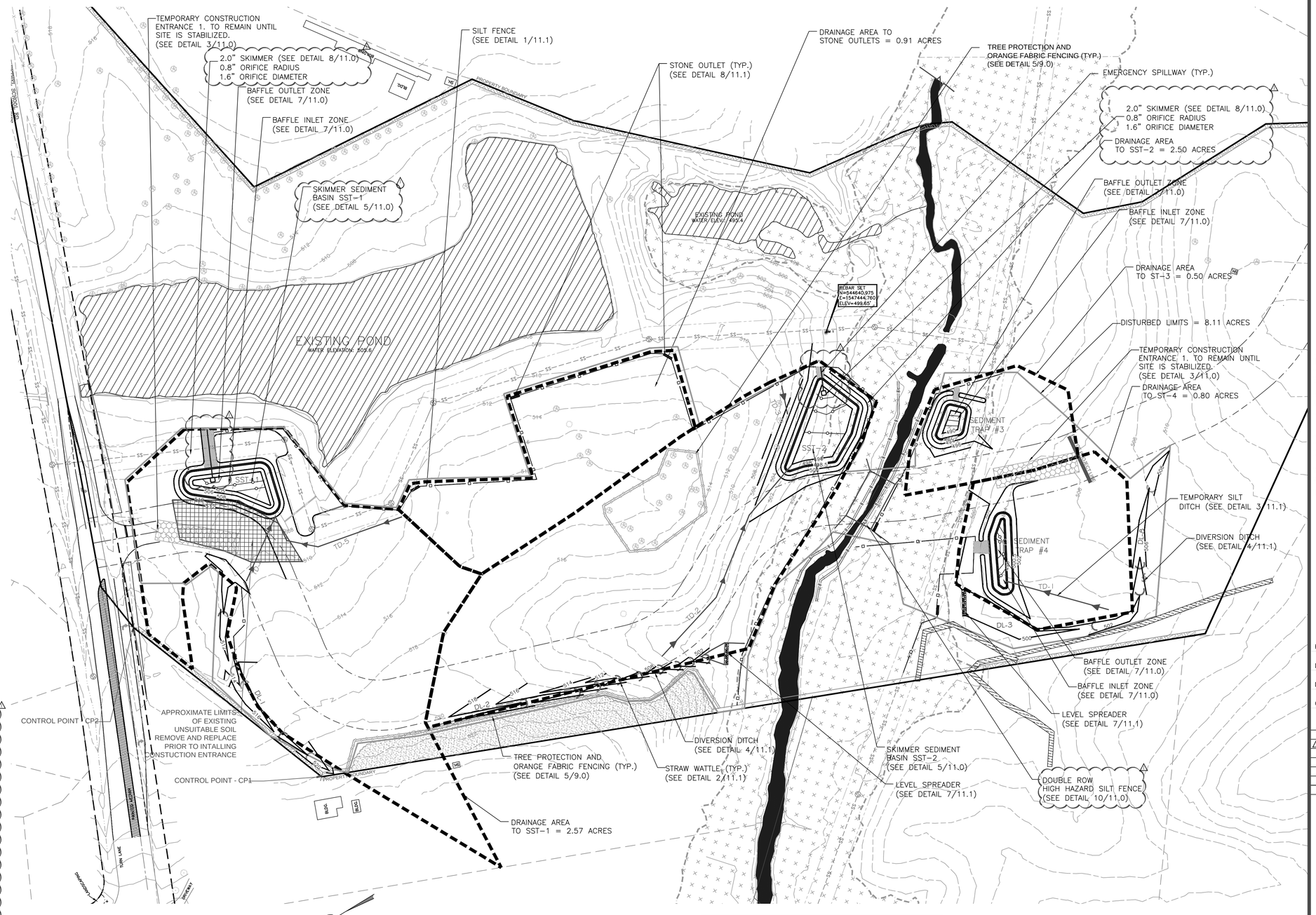

GRAPHIC SCALE
60 0 30 60 120

BEFORE YOU DIG STOP. CALL THE NC ONE-CALL CENTER AT 811.
IT'S THE LAW.

1. CONTACT THE PLANNING DEPARTMENT TO SET UP A PRE-CONSTRUCTION MEETING.
2. ALL TREE PROTECTION DEVICES MUST BE INSTALLED PRIOR TO INSPECTION BY THE PLANNING, ZONING AND SUBDIVISION ADMINISTRATOR AND PRIOR TO ANY TREE DISTURBANCE ACTIVITIES.
3. REMOVAL OR DAMAGE OF TREES IN THE CONSERVATION AREA WILL BE SUBJECT TO THE PENALTIES ESTABLISHED IN THE SECTION 11.18, ENFORCEMENT, OF THIS ORDINANCE.

COPYRIGHT © 2016 AMICUS PARTNERS, PLLC
ALL RIGHTS RESERVED. REPRODUCTION OR USE OF THE CONTENTS OF THIS DOCUMENT, OR ADDITIONS OR DELETIONS TO THIS DOCUMENT, IN WHOLE OR IN PART, WITHOUT WRITTEN CONSENT OF AMICUS PARTNERS, IS STRICTLY PROHIBITED. ONLY COPIES FROM THE ORIGINAL OF THIS DOCUMENT, AS APPROVED BY THE ENGINEER SHALL BE CONSIDERED TO BE VALID, TRUE COPIES.

REFERENCE: ALL PARCEL AND BOUNDARY INFORMATION, ADJACENT PROPERTIES, PROPERTY DIMENSIONS, AND COORDINATES REFERENCED FROM A SURVEY COMPLETED BY CESI LAND DEVELOPMENT SERVICES. TOPOGRAPHIC INFORMATION PROVIDED REFERENCED FROM A SURVEY CONDUCTED BY CESI LAND DEVELOPMENT SERVICES. ALL COORDINATES ARE BASED ON LOCALIZED NAD 83(2011); AND VERTICAL DATUMIS NAVD 1988.

Amicus Partners, PLLC
Firm License # P-1191
331 Coddle Market Drive
Suite 110
Concord, NC 28027
Civil Site Design
Low Impact Development
Small-Scale Building Design
Telephone: 704.573.1621
Facsimile: 704.248.7951

Seals:

NORTH CAROLINA PROFESSIONAL SEAL 032006 ENGINEER NICHOLAS R. PARKER
05-13-2016

ROB WALLACE PARK
CABARRUS COUNTY, NORTH CAROLINA

FOR
MR. KYLE BILAFER
INFRASTRUCTURE AND ASSET MANAGEMENT
CABARRUS COUNTY GOVERNMENTAL CENTER
PO BOX 707
CONCORD, NC 28026

Project Number: 17-16-010
Date: △05-13-2016
Drawn By: CMM
Checked By: NRP

Revisions:

	04/20/16	Original Submittal
△	05/13/16	Per Developer

Sheet Title:
Erosion Phase 1/ Clearing

Sheet No:
C-4.0

OVERALL CONSTRUCTION SEQUENCE:

1. SETUP AN ON-SITE PRE-CONSTRUCTION CONFERENCE WITH NCDEQ EROSION CONTROL INSPECTOR AND TOWN OF MIDLAND REPRESENTATIVE TO DISCUSS DEVELOPMENT OF ALL PHASES. FAILURE TO SCHEDULE SUCH CONFERENCE 48-HOURS PRIOR TO ANY LAND DISTURBING ACTIVITIES IS A VIOLATION OF LOCAL CODE AND MAY BE SUBJECT TO FINES OR OTHER PENALTIES.

2. SURVEY AND FLAG THE DENUDED LIMITS.

3. REMOVE AND REPLACE UNSUITABLE SOIL, INSTALL CONSTRUCTION ENTRANCE.

4. INSTALL SILT FENCE, SEDIMENT TRAPS, SKIMMER SEDIMENT TRAPS, LEVEL SPREADERS (FOR OFF SITE DRAINAGE SWALES) AND OTHER MEASURES (AS SHOWN ON THIS SHEET); CLEARING ONLY AS NECESSARY TO INSTALL THESE DEVICES.

4A. NOTE: THERE SHALL BE NO CROSSING OF UNNAMED TRIBUTARY TO MUDDY CREEK UNTIL BOTTOMLESS CULVERT IS INSTALLED. ACCESS FOR THE INSTALLATION OF EROSION CONTROL MEASURES ON THE SOUTH SIDE OF STREAM SHALL BE MADE FROM BILL MCGEE ROAD.

5. SEDIMENT TRAPS NEED TO BE STABILIZED IMMEDIATELY AFTER INSTALLATION.

6. CALL FOR ON-SITE INSPECTION BY NCDEQ INSPECTOR. WHEN APPROVED, CONTRACTOR MAY THEN BEGIN CLEARING AND GRUBBING THE REMAINING PORTIONS OF PHASES.

7. GRADE AND INSTALL STORM DRAINAGE SYSTEM AS DEPICTED ON SHEET C-5.0.

8. MAINTAIN EROSION CONTROL DEVICES AS NECESSARY.

9. STABILIZE SITE AS AREAS ARE BROUGHT TO FINISH GRADE. REFER TO DETAIL SHEET C-11.0 FOR SEEDING.

10. CONTRACTOR TO COORDINATE WITH EROSION CONTROL INSPECTOR PRIOR TO REMOVAL OF ANY EROSION CONTROL MEASURES.

EROSION CONTROL NOTES:

1. ALL "REFERENCE" NUMBERS REFER TO DEQ MANUAL UNLESS OTHERWISE NOTED.

2. ON-SITE BURIAL PITS MAY REQUIRE AN ON-SITE DEMOLITION LANDFILL PERMIT FROM THE ZONING ADMINISTRATOR.

3. ANY GRADING BEYOND THE DENUDED LIMITS SHOWN ON THE PLAN IS A VIOLATION OF THE STATE EROSION CONTROL ORDINANCE AND IS SUBJECT TO A FINE.

4. GRADING MORE THAN ONE ACRE WITHOUT AN APPROVED EROSION CONTROL PLAN IS A VIOLATION OF THE COUNTY EROSION CONTROL ORDINANCE AND IS SUBJECT TO A FINE.

5. GROUND STABILIZATION: SEE ADJACENT NEW STABILIZATION TIMEFRAME CHART.

6. ADDITIONAL MEASURES TO CONTROL EROSION AND SEDIMENT MAY BE REQUIRED BY A REPRESENTATIVE OF THE TOWN, COUNTY OR NCDEQ.

7. SLOPES SHALL BE GRADED NO STEEPER THAN 2:1. FILL SLOPES GREATER THAN 10' REQUIRE ADEQUATE TERRACING. EMBANKMENT MATTING MAY BE REQUIRED FOR SLOPES STEEPER THAN 3:1 BASED ON MATERIAL.

8. A GRADING PLAN MUST BE SUBMITTED FOR ANY GRADING EXCEEDING ONE ACRE THAT WAS NOT PREVIOUSLY APPROVED.

9. TEMPORARY DRIVEWAY PERMIT FOR CONSTRUCTION ENTRANCES IN NCDOT RIGHT OF WAY MUST BE PRESENTED AT PRE-CONSTRUCTION MEETING. (IF APPLICABLE)

BOTTOMLESS CULVERT SEQUENCE:

1. CLEARLY FLAG TOP OF BANK (TOB).

2. INSTALL DOUBLE ROW HIGH HAZARD SILT FENCE EACH SIDE OF MUDDY CREEK ALONG TOB. EXTEND A MIN. OF 20' PAST END OF HEADWALLS.

3. PREPARE AND CONSTRUCT FOUNDATIONS FOR CROSSING.

4. SET CROSSING USING CRANE.

5. INSTALL HEADWALLS AND BACKFILL ACCORDING TO DESIGN DOCUMENTS. CARE SHALL BE TAKEN.

6. DOUBLE ROW HIGH HAZARD SILT FENCE SHALL REMAIN UNTIL SITE IS COMPLETELY STABILIZED.

NOTE:
IF THE NEED ARISES FOR ANY OFF-SITE BORROW OR SPOIL SITE DURING CONSTRUCTION, SUBMIT A REVISION THAT DEMONSTRATES EROSION CONTROL FOR THE AREA AND ACCOUNT FOR THE ADDITIONAL ACREAGE IN THE REVIEW FEE OR PROVIDE THE GRADING PERMIT IF THE LOCATION IS ALREADY APPROVED ON SITE.

MAINTENANCE PLAN:
THE FOLLOWING MAINTENANCE PLAN SHALL BE FOLLOWED FOR EROSION AND SEDIMENT CONTROL DEVICES UNTIL THE SITE IS COMPLETELY STABILIZED AND AFTER CONSTRUCTION FOR STORM WATER MANAGEMENT DEVICES THROUGHOUT THE LIFECYCLE OF THE DEVELOPMENT. DURING CONSTRUCTION, THE CONTRACTOR SHALL BE RESPONSIBLE FOR INSPECTION AND MAINTENANCE OF ALL EROSION CONTROL FEATURES. FOLLOWING CONSTRUCTION, THE OWNER/RESPONSIBLE PARTY IS RESPONSIBLE FOR INSPECTION AND MAINTENANCE OF ALL STORM WATER MANAGEMENT FEATURES.

1. ALL EROSION CONTROL MEASURES WILL BE CHECKED FOR STABILITY AND OPERATION FOLLOWING ANY RAINFALL PRODUCING RUNOFF AT LEAST ONCE A WEEK. ANY NEEDED REPAIRS WILL BE MADE IMMEDIATELY SO THAT ALL EROSION CONTROL MEASURES ARE MAINTAINED AS DESIGNED.

2. THE SEDIMENT TRAPS WILL BE CLEANED OUT WHEN THE LEVEL OF SEDIMENT REACHES APPROXIMATELY ONE HALF OF THE TRAP OR BASIN VOLUME.

3. ALL SEEDED AREAS WILL BE FERTILIZED, RESEEDED AS NECESSARY, AND MULCHED ACCORDING TO THE SEEDING SPECIFICATIONS AND THE REMEDIATION PLAN IN ORDER TO MAINTAIN A DENSE VEGETATIVE COVER.

4. ALL SEEDED AREAS WILL BE RE-FERTILIZED IN THE SECOND YEAR UNLESS GROWTH IS FULLY ADEQUATE. GRASSED AREAS WILL BE MOWED AT LEAST ONCE A YEAR.

SELF INSPECTIONS
EFFECTIVE OCTOBER 1, 2010, PERSONS RESPONSIBLE FOR LAND DISTURBING ACTIVITIES MUST INSPECT THE SEDIMENT AND EROSION CONTROL MEASURES ON A PROJECT AFTER EACH PHASE OF THE PROJECT TO MAKE SURE THAT THE APPROVED EROSION AND SEDIMENTATION PLAN IS BEING FOLLOWED. SELF-INSPECTION REPORTS ARE REQUIRED. A SAMPLE SELF-INSPECTION REPORT, AS WELL AS DETAILS OF THE SELF-INSPECTION PROGRAM, CAN BE FOUND ON THE LAND QUALITY WEB SITE: http://deq.nc.gov/about/divisions/energy-mineral-land-resources/erosion-sediment-control

AS A MINIMUM, THE INSPECTIONS SHALL BE PERFORMED AFTER EACH OF THE FOLLOWING PHASES OF A PLAN:
1. INSTALLATION OF PERIMETER EROSION AND SEDIMENT CONTROL MEASURES.

2. INSTALLATION OF SEDIMENT TRAPS/BASINS.

3. CLEARING AND GRUBBING OF EXISTING GROUND COVER.

4. COMPLETION OF ANY PHASE OF GRADING THAT REQUIRES PROVISION OF STABILIZATION.

5. INSTALLATION OF MEASURES DURING ANY PHASE OF THE PROJECT.

6. COMPLETION OF CONSTRUCTION OR DEVELOPMENT.

7. INSTALLATION OF STORMWATER RETENTION MEASURES.

8. QUARTERLY UNTIL THE ESTABLISHMENT OF PERMANENT GROUND COVER IS FULLY ESTABLISHED.

PLEASE NOTE THESE INSPECTION REQUIREMENTS ARE IN ADDITION TO NPDES INSPECTION REQUIREMENTS. IF YOU HAVE QUESTIONS ABOUT THE SELF-INSPECTION PROGRAM, PLEASE CONTACT US AT (704) 663-1899.

LEGEND:

- DEVELOPMENT BOUNDARY
- STREAM TOP OF BANK
- EXISTING RIGHT-OF-WAY
- EXISTING FENCE
- ADJACENT PROPERTY
- EXISTING POWERLINE
- EXISTING SANITARY SEWER EASMENT
- PROPOSED RIGHT-OF-WAY
- 966 EXISTING TOPOGRAPHY
- 966 PROPOSED GRADE
- EXISTING WETLANDS
- 5' UNDISTURBED BUFFER
- DISTURBED LIMITS
- DRAINAGE AREA
- EXISTING TREE TO REMAIN
- TD-1 TEMPORARY DIVERSION DITCH (SEE DETAIL 3/11.1 FOR SPECIFICATIONS)
- SILT FENCE (SEE DETAIL 1/11.1 FOR SPECIFICATIONS)
- DOUBLE ROW HIGH HAZARD SILT FENCE (SEE DETAIL 10/11.0)
- HARDWARE CLOTH & GRAVEL INLET PROTECTION (INSTALL SILT SACKS AFTER PAVING) (SEE DETAIL 5/11.1 FOR SPECIFICATIONS)
- STRAW WATTLE
- ROCK CHECK OUTLET
- BAFFLES
- DL-3 PERMANENT DITCH LINE
- TEMPORARY CONSTRUCTION ENTRANCE

COPYRIGHT © 2016, AMICUS PARTNERS, PLLC.
ALL RIGHTS RESERVED. REPRODUCTION OR USE OF THE CONTENTS OF THIS DOCUMENT, OR ADDITIONS OR DELETIONS TO THIS DOCUMENT, IN WHOLE OR IN PART, WITHOUT WRITTEN CONSENT OF AMICUS PARTNERS, IS STRICTLY PROHIBITED. ONLY COPIES FROM THE ORIGINAL OF THIS DOCUMENT, AS APPROVED BY THE ENGINEER SHALL BE CONSIDERED TO BE VALID, TRUE COPIES.

REFERENCE: ALL PARCEL AND BOUNDARY INFORMATION, ADJACENT PROPERTIES, PROPERTY DIMENSIONS, AND COORDINATES REFERENCED FROM A SURVEY COMPLETED BY CESI LAND DEVELOPMENT SERVICES. TOPOGRAPHIC INFORMATION PROVIDED REFERENCED FROM A SURVEY CONDUCTED BY CESI LAND DEVELOPMENT SERVICES. ALL COORDINATES ARE BASED ON LOCALIZED NAD 83(2011); AND VERTICAL DATUMIS NAVD 1988.

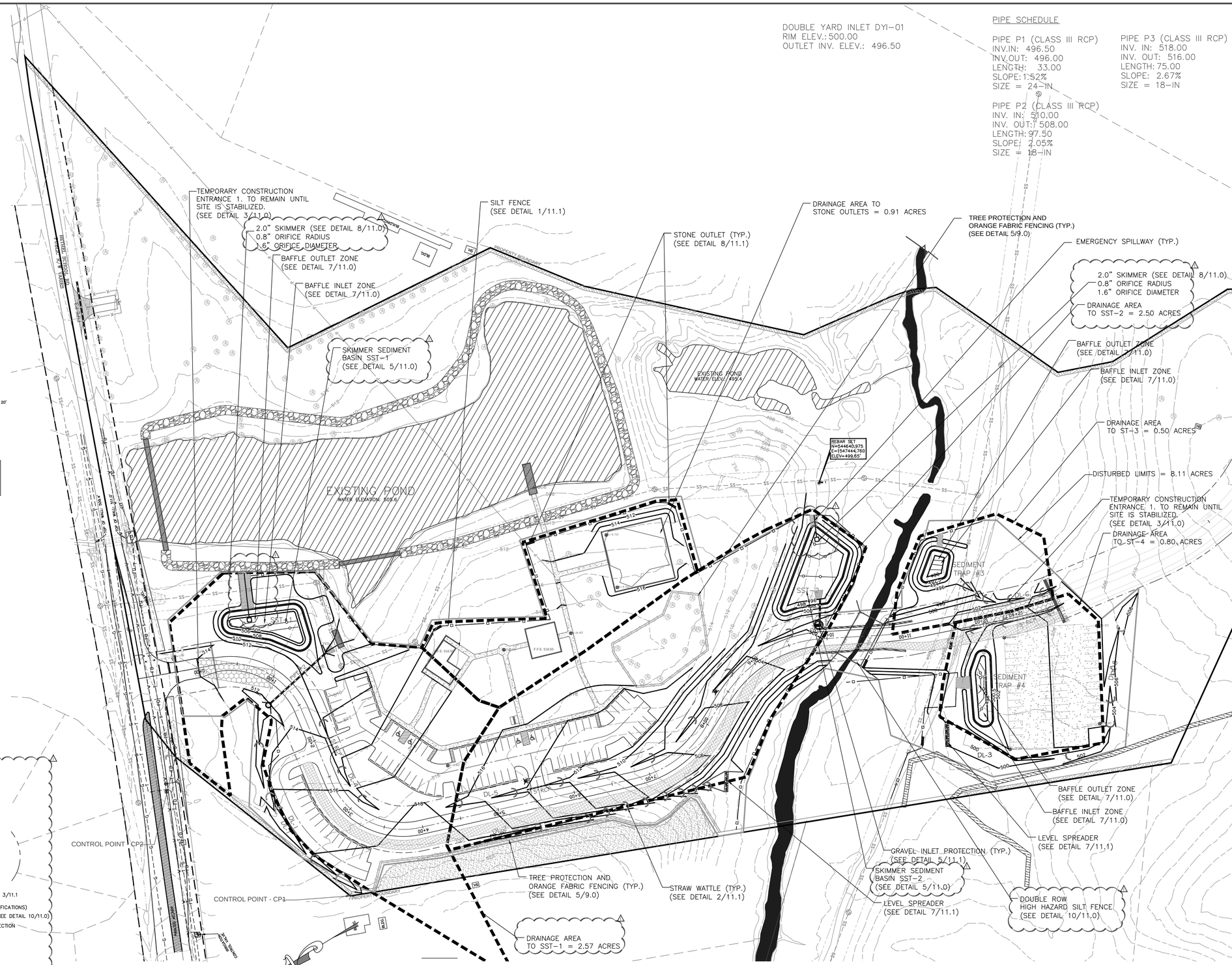

BEFORE YOU DIG STOP. CALL THE NC ONE-CALL CENTER AT 811.

IT'S THE LAW.

1. CONTACT THE PLANNING DEPARTMENT TO SET UP A PRE-CONSTRUCTION MEETING.
2. ALL TREE PROTECTION DEVICES MUST BE INSTALLED PRIOR TO INSPECTION BY THE PLANNING, ZONING AND SUBDIVISION ADMINISTRATOR AND PRIOR TO ANY TREE DISTURBANCE ACTIVITIES.
3. REMOVAL OR DAMAGE OF TREES IN THE CONSERVATION AREA WILL BE SUBJECT TO THE PENALTIES ESTABLISHED IN THE SECTION 11.18, ENFORCEMENT, OF THIS ORDINANCE.

Amicus Partners, PLLC
Firm License # P-1191
331 Coddle Market Drive
Suite 110
Concord, NC 28027
Civil Site Design
Low Impact Development
Small-Scale Building Design
Telephone: 704.573.1621
Facsimile: 704.248.7951

Seals:

NORTH CAROLINA PROFESSIONAL SEAL 032006 ENGINEER NICHOLAS R. PARKER

05-13-2016

ROB WALLACE PARK
CABARRUS COUNTY, NORTH CAROLINA

FOR
MR. KYLE BILAFER
INFRASTRUCTURE AND ASSET MANAGEMENT
CABARRUS COUNTY GOVERNMENTAL CENTER
PO BOX 707
CONCORD, NC 28026

Project Number: 17-16-010
Date: △05-13-2016
Drawn By: CMM
Checked By: NRP

Revisions:

	04/20/16	Original Submittal
△	05/13/16	Per Developer

Sheet Title:

Erosion Phase 2/ Grading

Sheet No:

C-5.0

1. CONTACT THE PLANNING DEPARTMENT TO SET UP A PRE-CONSTRUCTION MEETING.
2. ALL TREE PROTECTION DEVICES MUST BE INSTALLED PRIOR TO INSPECTION BY THE PLANNING, ZONING AND SUBDIVISION ADMINISTRATOR AND PRIOR TO ANY TREE DISTURBANCE ACTIVITIES.
3. REMOVAL OR DAMAGE OF TREES IN THE CONSERVATION AREA WILL BE SUBJECT TO THE PENALTIES ESTABLISHED IN THE SECTION 11.18, ENFORCEMENT, OF THIS ORDINANCE.

DOUBLE YARD INLET DYI-01
RIM ELEV.: 500.00
OUTLET INV. ELEV.: 496.50

PIPE SCHEDULE

PIPE P1 (CLASS III RCP)
INV.IN: 496.50
INV.OUT: 496.00
LENGTH: 33.00
SLOPE: 1.52%
SIZE = 24-IN

PIPE P2 (CLASS III RCP)
INV. IN: 510.00
INV. OUT: 508.00
LENGTH: 97.50
SLOPE: 2.05%
SIZE = 18-IN

PIPE P3 (CLASS III RCP)
INV. IN: 518.00
INV. OUT: 516.00
LENGTH: 75.00
SLOPE: 2.67%
SIZE = 18-IN

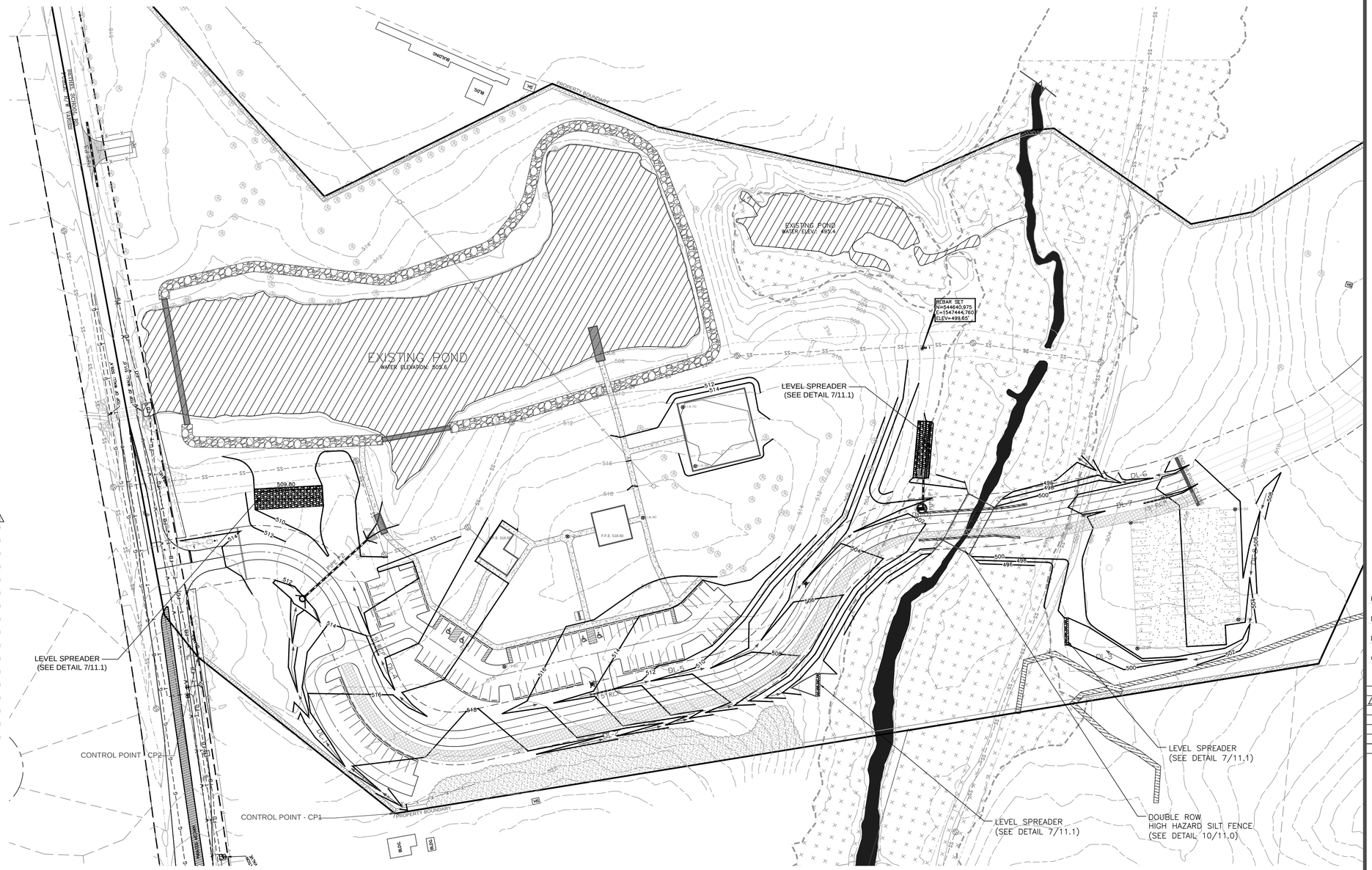

LEGEND:

- DEVELOPMENT BOUNDARY
- STREAM TOP OF BANK
- EXISTING RIGHT-OF-WAY
- EXISTING FENCE
- ADJACENT PROPERTY
- EXISTING POWERLINE
- EXISTING SANITARY SEWER EASMENT
- PROPOSED RIGHT-OF-WAY
- EXISTING TOPOGRAPHY
- PROPOSED GRADE
- EXISTING WETLANDS
- 12' BIKE PATH (COMPACTED EARTH)
- 6' CONCRETE SIDEWALK
- 12' SCREENINGS WALKWAY
- 5' UNDISTURBED BUFFER
- GUARDRAIL
- EXISTING TREE TO REMAIN
- TEMPORARY DIVERSION DITCH (SEE DETAIL 6/5.4 FOR SPECIFICATIONS)
- SILT FENCE (SEE DETAIL 3/5.4 FOR SPECIFICATIONS)
- HARDWARE CLOTH & GRAVEL INLET PROTECTION (INSTALL SILT SACKS AFTER PAVING) (SEE DETAIL 8/5.4 FOR SPECIFICATIONS)

GRAPHIC SCALE

60 0 30 60 120

BEFORE YOU DIG STOP. CALL THE NC ONE-CALL CENTER AT 811.

IT'S THE LAW.

COPYRIGHT © 2016, AMICUS PARTNERS, PLLC.
ALL RIGHTS RESERVED. REPRODUCTION OR USE OF THE CONTENTS OF THIS DOCUMENT, OR ADDITIONS OR DELETIONS TO THIS DOCUMENT, IN WHOLE OR IN PART, WITHOUT WRITTEN CONSENT OF AMICUS PARTNERS, IS STRICTLY PROHIBITED. ONLY COPIES FROM THE ORIGINAL OF THIS DOCUMENT, AS APPROVED BY THE ENGINEER SHALL BE CONSIDERED TO BE VALID, TRUE COPIES.

REFERENCE: ALL PARCEL AND BOUNDARY INFORMATION, ADJACENT PROPERTIES, PROPERTY DIMENSIONS, AND COORDINATES REFERENCED FROM A SURVEY COMPLETED BY CESI LAND DEVELOPMENT SERVICES. TOPOGRAPHIC INFORMATION PROVIDED REFERENCED FROM A SURVEY CONDUCTED BY CESI LAND DEVELOPMENT SERVICES. ALL COORDINATES ARE BASED ON LOCALIZED NAD 83(2011); AND VERTICAL DATUMIS NAVD 1988.

Amicus Partners, PLLC
Firm License # P-1191
331 Coddle Market Drive
Suite 110
Concord, NC 28027
Civil Site Design
Low Impact Development
Small-Scale Building Design
Telephone: 704.573.1621
Facsimile: 704.248.7951

Seals:

NORTH CAROLINA PROFESSIONAL SEAL 032006 ENGINEER NICHOLAS R PINKER

05-13-2016

ROB WALLACE PARK
CABARRUS COUNTY, NORTH CAROLINA

FOR
MR. KYLE BILAFER
INFRASTRUCTURE AND ASSET MANAGEMENT
CABARRUS COUNTY GOVERNMENTAL CENTER
PO BOX 707
CONCORD, NC 28026

Project Number: 17-16-010
Date: △05-13-2016
Drawn By: CMM
Checked By: NRP

Revisions:

	04/20/16	Original Submittal
△	05/13/16	Per Developer

Sheet Title:
Post Construction Storm Water Management Plan

Sheet No:
C-5.1

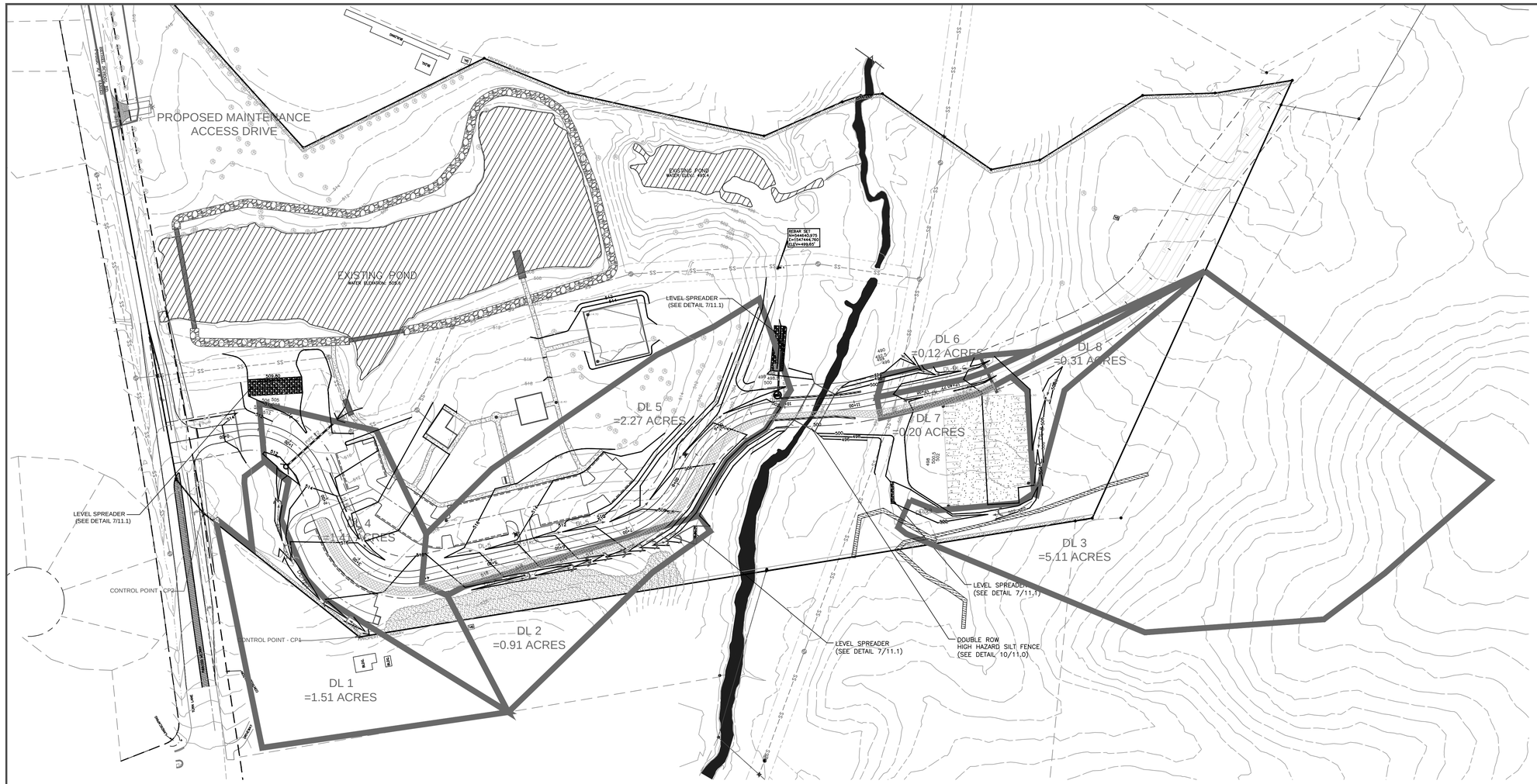

Swale	Phase	Location	Left Side	Right Side	Bottom Width (ft)	Longitudinal Slope (%)	Drainage Area (Acres)	Runoff Coefficient	Rainfall Intensity (in/hr)	Calculated Flow (cfs)	Additional Upstream Flow (cfs)	Total Flow (cfs)	Permanent Liner Req. (Y/N)	Permanent Liner Type	Mannings "n"	Channel Depth (ft)	Water Depth (ft)	Freeboard (ft)	Channel Area (sq. ft)	Hydraulic Radius (ft)	Velocity (fps)	Temporary Liner (for grass)
DL-1	1&2	Northern Parking Lot	3 to 1	3 to 1	0.5	4.03	1.51	0.3	7.26	3.29	N/A	3.29	N	N/A	0.053	1	0.57	0.43	1.26	0.31	2.62	DS75
DL-2	1&2	North of Road Station (4+50-8+00)	3 to 1	3 to 1	0.5	5.98	0.91	0.3	7.26	1.98	N/A	1.98	N	N/A	0.055	1	0.43	0.57	0.78	0.24	2.55	DS150
DL-3	1&2	Around Gravel Lot	3 to 1	3 to 1	0.5	2.16	5.11	0.3	7.26	11.13	0.56	11.69	N	N/A	0.043	1.5	1.01	0.49	3.59	0.52	3.26	DS75
DL-4	1&2	South of Road Station (1+00-3+50)	3 to 1	3 to 1	0.5	2.62	1.41	0.59	7.26	6.04	N/A	6.04	N	N/A	0.049	1	0.78	0.22	2.22	0.41	2.72	DS75
DL-5	1&2	South ofRoad Station (4+50-10+00)	3 to 1	3 to 1	0.5	2.82	2.27	0.59	7.26	9.72	N/A	9.72	N	N/A	0.046	1	0.91	0.09	2.94	0.47	3.3	DS150
DL-6	1&2	South of Road Station (11+50-End)	3 to 1	3 to 1	0.5	1.28	0.12	0.6	7.26	0.52	N/A	0.52	N	N/A	0.055	1	0.34	0.66	0.51	0.19	1.02	DS75
DL-7	1&2	North of Road Station (11+50-End)	3 to 1	3 to 1	0.5	1.23	0.2	0.6	7.26	0.87	N/A	0.87	N	N/A	0.055	1	0.43	0.57	0.76	0.24	1.15	DS75
DL-8	1&2	South of Gravel Lot	3 to 1	3 to 1	0.5	2.08	0.31	0.3	7.26	0.68	N/A	0.68	N	N/A	0.055	1	0.34	0.66	0.52	0.2	1.31	DS75

LEGEND:

- DEVELOPMENT BOUNDARY
- STREAM TOP OF BANK
- EXISTING RIGHT-OF-WAY
- EXISTING FENCE
- ADJACENT PROPERTY
- EXISTING POWERLINE
- EXISTING SANITARY SEWER EASMENT
- PROPOSED RIGHT-OF-WAY
- EXISTING TOPOGRAPHY
- PROPOSED GRADE
- EXISTING WETLANDS
- 12' BIKE PATH (COMPACTED EARTH)
- 6' CONCRETE SIDEWALK
- 12' SCREENINGS WALKWAY
- 5' UNDISTURBED BUFFER
- GUARDRAIL
- EXISTING TREE TO REMAIN
- DITCHLINE DRAINAGE AREA

GRAPHIC SCALE

80 0 40 80 160

BEFORE YOU DIG STOP. CALL THE NC ONE-CALL CENTER AT 811.

IT'S THE LAW.

COPYRIGHT © 2016, AMICUS PARTNERS, PLLC.
ALL RIGHTS RESERVED. REPRODUCTION OR USE OF THE CONTENTS OF THIS DOCUMENT, OR ADDITIONS OR DELETIONS TO THIS DOCUMENT, IN WHOLE OR IN PART, WITHOUT WRITTEN CONSENT OF AMICUS PARTNERS, IS STRICTLY PROHIBITED. ONLY COPIES FROM THE ORIGINAL OF THIS DOCUMENT, AS APPROVED BY THE ENGINEER SHALL BE CONSIDERED TO BE VALID, TRUE COPIES.

REFERENCE: ALL PARCEL AND BOUNDARY INFORMATION, ADJACENT PROPERTIES, PROPERTY DIMENSIONS, AND COORDINATES REFERENCED FROM A SURVEY COMPLETED BY CESI LAND DEVELOPMENT SERVICES. TOPOGRAPHIC INFORMATION PROVIDED REFERENCED FROM A SURVEY CONDUCTED BY CESI LAND DEVELOPMENT SERVICES. ALL COORDINATES ARE BASED ON LOCALIZED NAD 83(2011); AND VERTICAL DATUMIS NAVD 1988.

Amicus Partners, PLLC
Firm License # P-1191
331 Coddle Market Drive
Suite 110
Concord, NC 28027
Civil Site Design
Low Impact Development
Small-Scale Building Design
Telephone: 704.573.1621
Facsimile: 704.248.7951

Seals:

NORTH CAROLINA PROFESSIONAL ENGINEER SEAL 032006 NICHOLAS R. PARKER

05-13-2016

ROB WALLACE PARK
CABARRUS COUNTY, NORTH CAROLINA

MR. KYLE BILAFER
INFRASTRUCTURE AND ASSET MANAGEMENT
CABARRUS COUNTY GOVERNMENTAL CENTER
PO BOX 707
CONCORD, NC 28026

Project Number: 17-16-010

Date: △05-13-2016

Drawn By: CMM

Checked By: NRP

Revisions:

	04/20/16	Original Submittal
△	05/13/16	Per Developer

Sheet Title:

Drainage Map

Sheet No:

C-6.0

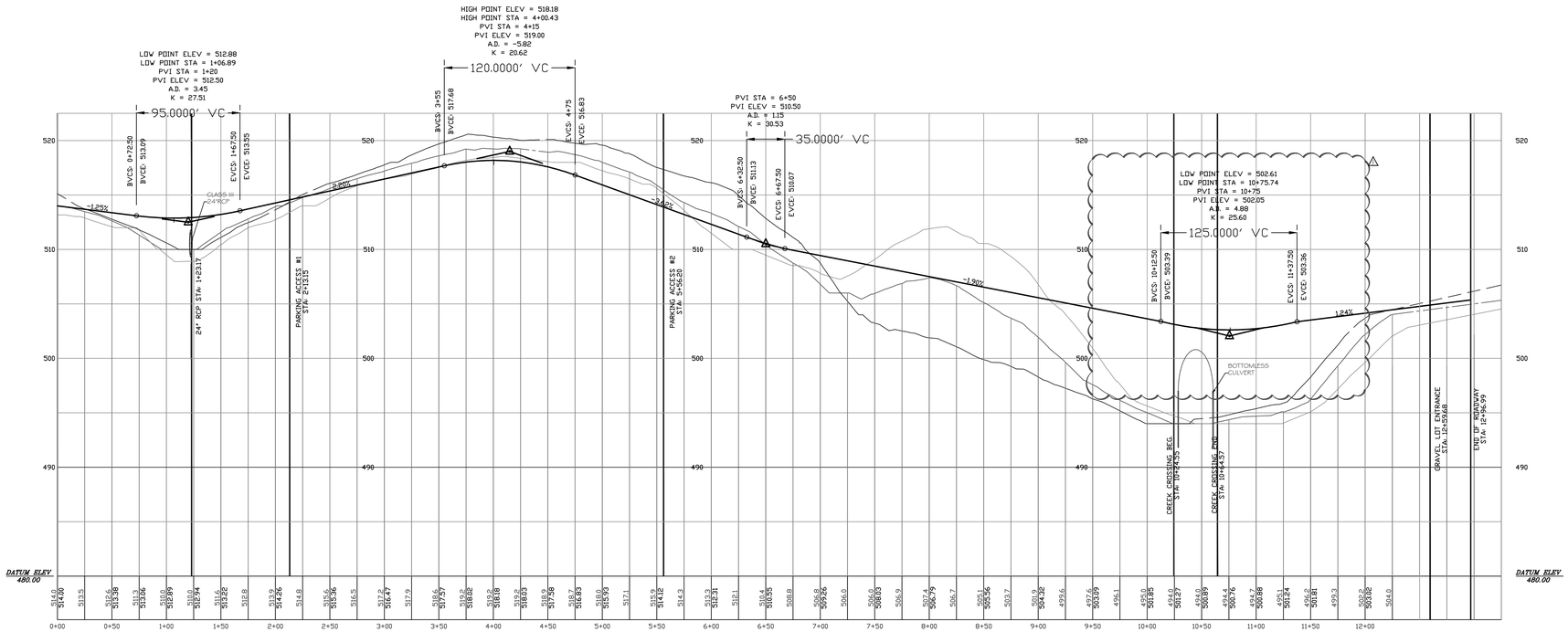

HORIZONTAL GRAPHIC SCALE
1 INCH = 60 FEET

60 0 30 60 120

VERTICAL GRAPHIC SCALE
1 INCH = 6 FEET

6 0 3 6 12

PROFILE LEGEND

- PROPOSED ROADWAY CENTERLINE
- EXISTING GRADE (LEFT R/W)
- EXISTING GRADE (RIGHT R/W)
- EXISTING GRADE (CENTERLINE)

COPYRIGHT © 2016, AMICUS PARTNERS, PLLC.
ALL RIGHTS RESERVED. REPRODUCTION OR USE OF THE CONTENTS OF THIS DOCUMENT, OR ADDITIONS OR DELETIONS TO THIS DOCUMENT, IN WHOLE OR IN PART, WITHOUT WRITTEN CONSENT OF AMICUS PARTNERS, IS STRICTLY PROHIBITED. ONLY COPIES FROM THE ORIGINAL OF THIS DOCUMENT, AS APPROVED BY THE ENGINEER SHALL BE CONSIDERED TO BE VALID, TRUE COPIES.

REFERENCE: ALL PARCEL AND BOUNDARY INFORMATION, ADJACENT PROPERTIES, PROPERTY DIMENSIONS, AND COORDINATES REFERENCED FROM A SURVEY COMPLETED BY CESI LAND DEVELOPMENT SERVICES. TOPOGRAPHIC INFORMATION PROVIDED REFERENCED FROM A SURVEY CONDUCTED BY CESI LAND DEVELOPMENT SERVICES. ALL COORDINATES ARE BASED ON LOCALIZED NAD 83(2011); AND VERTICAL DATUMIS NAVD 1988.

Amicus Partners, PLLC
Firm License # P-1191
331 Coddle Market Drive
Suite 110
Concord, NC 28027
Civil Site Design
Low Impact Development
Small-Scale Building Design
Telephone: 704.573.1621
Facsimile: 704.248.7951

Seals:

NORTH CAROLINA PROFESSIONAL SEAL 032006 ENGINEER NICHOLAS R. PARKER

05-13-2016

ROB WALLACE PARK
CABARRUS COUNTY, NORTH CAROLINA

FOR
MR. KYLE BILAFER
INFRASTRUCTURE AND ASSET MANAGEMENT
CABARRUS COUNTY GOVERNMENTAL CENTER
PO BOX 707
CONCORD, NC 28026

Project Number: 17-16-010
Date: △05-13-2016
Drawn By: CMM
Checked By: NRP

Revisions:

	04/20/16	Original Submittal
△	05/13/16	Per Developer

Sheet Title:

Roadway Profile

Sheet No:

C-7.0

GENERAL NOTES:

1. FIRE ACCESS AND WATER SUPPLY SHALL BE ESTABLISHED AND MAINTAINED PRIOR TO VERTICAL CONSTRUCTION.

2. 2" REDUCED PRESSURE BACKFLOW ASSEMBLY TO BE INSTALLED. P.C. TO VERIFY REQUIRED WATER LINE SIZE WITH ARCHITECT PRIOR TO CONSTRUCTION.

3. ACCESS TO ALL PUBLIC UTILITIES WILL NEED TO BE MAINTAINED IN ACCORDANCE WITH CITY OF CONCORD CODE OF ORDINANCE CHAPTER 62.

4. AN APPROVED WATER SUPPLY FOR FIRE PROTECTION, EITHER TEMPORARY OR PERMANENT, SHALL BE MADE AVAILABE AS SOON AS COMBUSTIBLE MATERIAL ARRIVES ON SITE.

5. ALL ELECTRICAL INSTALLATIONS MUST COMPLY WITH THE CITY OF CONCORD'S TECHNICAL STANDARDS MANUAL.

6. ANY NECESSARY RELOCATION OF EXISTING ELECTRIC UTILITIES MUST BE COORDINATED AND WILL BE AT THE COST OF THE OWNER/DEVELOPER.

7. ALL MATERIALS, EQUIPMENT, LABOR, AND WORKMANSHIP SHALL BE IN ACCORDANCE WITH AND SUBJECT TO THE WATER AND SEWER AUTHORITY OF CABARRUS COUNTY'S STANDARD SPECIFICATIONS; THE CITY OF CONCORD'S ORDINANCES, POLICIES, AND STANDARD SPECIFICATIONS, AND THE NORTH CAROLINA ADMINISTRATIVE CODE FOR WASTEWATER COLLECTION AND WATER DISTRIBUTION SYSTEMS. IN THE EVENT OF CONFLICT BETWEEN THE WATER AND SEWER AUTHORITY OF CABARRUS COUNTY'S STANDARD SPECIFICATIONS; THE CITY OF CONCORD'S ORDINANCES, POLICIES, AND STANDARD SPECIFICATIONS, OR THE NORTH CAROLINA ADMINISTRATIVE CODE, THE MORE RESTRICTIVE REQUIREMENTS SHALL APPLY

8. REVIEW AND APPROVAL OF THE PLANS DOES NOT RELIEVE THE OWNER, CONTRACTOR, OR DEVELOPER FROM MEETING THE REQUIREMENTS OF THE CITY OF CONCORD'S OR CABARRUS COUNTY ORDINANCES, POLICIES, AND STANDARD SPECIFICATIONS, (AS APPLICABLE), CONCORD WATER & SEWER POLICIES AND TECHNICAL SPECIFICATIONS, THE "STANDARD SPECIFICATION FOR WASTEWATER COLLECTION & WASTE DISTRIBUTION FOR CABARRUS COUNTY (WSACC MANUAL) AND ANY OTHER LOCAL, STATE, AND FEDERAL REGULATIONS & APPROVALS

9. THE CONTRACTOR MUST CONTACT THE CITY OF CONCORD ENGINEERING CONSTRUCTION MANAGER, PHILLIP KINGSLAND, AT 704-920-5425 AT LEAST 24-HOURS PRIOR TO INITIATING ANY CONSTRUCTION ACTIVITY."

10. THE EXISTING WATER MAIN VALVE RIMS AND STEMS AND THE EXISTING SEWER MAIN MANHOLES RIMS ARE TO BE RAISED OR LOWERED TO FINAL GRADE ,AS APPLICABLE AND AT LEAST 3-FT OF GROUND COVER IS TO BE MAINTAINED OVER THE EXISTING UTILITIES AT ALL TIMES.

11. DEVELOPER SHALL APPLY FOR WATER AND SEWER SERVICE AND PAY APPLICABLE TAP FEES TO THE CITY. THE CITY WILL TRY TO ACCOMMODATE THE DEPICTED SERVICE LOCATIONS, AS INDICATED ON THE APPROVED PLANS; HOWEVER, FINAL DETERMINATION OF LOCATION OF SERVICE IS AT THE DISCRETION OF THE CITY OF CONCORD.

12. THE PROPOSED WATER LINE EXTENSIONS AND CONNECTIONS TO THE CITY'S MAINS MUST BE INDICATED AS PART OF THE DESIGN AND PERMITTED IN ACCORDANCE WITH THE CITY'S DELEGATED AUTHORITY. THE HYDRAULIC ANALYSIS OF THE WATER SYSTEM AND THE FIRE PROTECTION NEEDS MUST BE EVALUATED AND SUBMITTED AS PART OF THE PERMITTED SYSTEM DESIGN. THE CONCTRACTOR DOES NOT HAVE THE AUTHORITY TO CHANGE A PERMITTED DESIGN

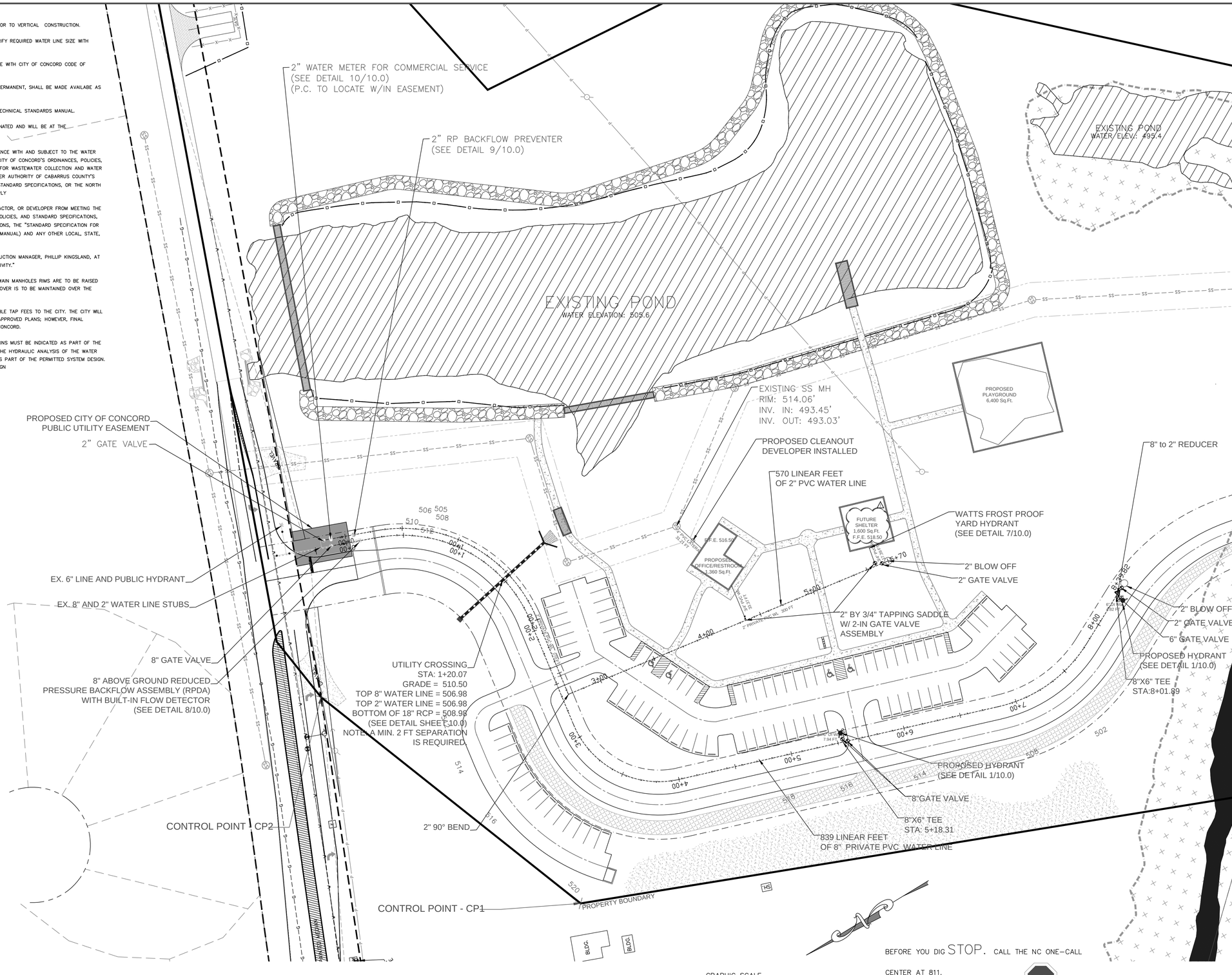

BEFORE YOU DIG STOP. CALL THE NC ONE-CALL CENTER AT 811.

IT'S THE LAW.

COPYRIGHT © 2016, AMICUS PARTNERS, PLLC.
ALL RIGHTS RESERVED. REPRODUCTION OR USE OF THE CONTENTS OF THIS DOCUMENT, OR ADDITIONS OR DELETIONS TO THIS DOCUMENT, IN WHOLE OR IN PART, WITHOUT WRITTEN CONSENT OF AMICUS PARTNERS, IS STRICTLY PROHIBITED. ONLY COPIES FROM THE ORIGINAL OF THIS DOCUMENT, AS APPROVED BY THE ENGINEER SHALL BE CONSIDERED TO BE VALID, TRUE COPIES.

REFERENCE: ALL PARCEL AND BOUNDARY INFORMATION, ADJACENT PROPERTIES, PROPERTY DIMENSIONS, AND COORDINATES REFERENCED FROM A SURVEY COMPLETED BY CESI LAND DEVELOPMENT SERVICES. TOPOGRAPHIC INFORMATION PROVIDED REFERENCED FROM A SURVEY CONDUCTED BY CESI LAND DEVELOPMENT SERVICES. ALL COORDINATES ARE BASED ON LOCALIZED NAD 83(2011); AND VERTICAL DATUMIS NAVD 1988.

Amicus Partners, PLLC
Firm License # P-1191
331 Coddle Market Drive
Suite 110
Concord, NC 28027
Civil Site Design
Low Impact Development
Small-Scale Building Design
Telephone: 704.573.1621
Facsimile: 704.248.7951

Seals:

NORTH CAROLINA PROFESSIONAL SEAL 032006 ENGINEER NICHOLAS R. PARKER

05-13-2016

ROB WALLACE PARK
CABARRUS COUNTY, NORTH CAROLINA

FOR
MR. KYLE BILAFER
INFRASTRUCTURE AND ASSET MANAGEMENT
CABARRUS COUNTY GOVERNMENTAL CENTER
PO BOX 707
CONCORD, NC 28026

Project Number: 17-16-010

Date: △05-13-2016

Drawn By: CMM

Checked By: NRP

Revisions:

	04/20/16	Original Submittal
△	05/13/16	Per Developer

Sheet Title:

Utility Plan

Sheet No:

C-8.0

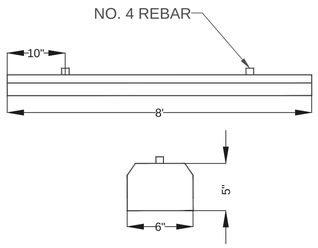

1/9 PARKING BUMPER DETAIL (TYP.)
SCALE: N.T.S.

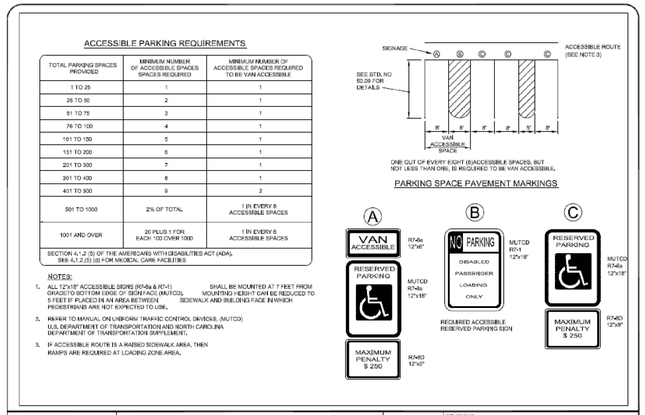

4/9 ACCESSIBLE PARKING AND SIGNAGE
SCALE: N.T.S.
[REF: TOWN OF MIDLAND STANDARDS MANUAL]

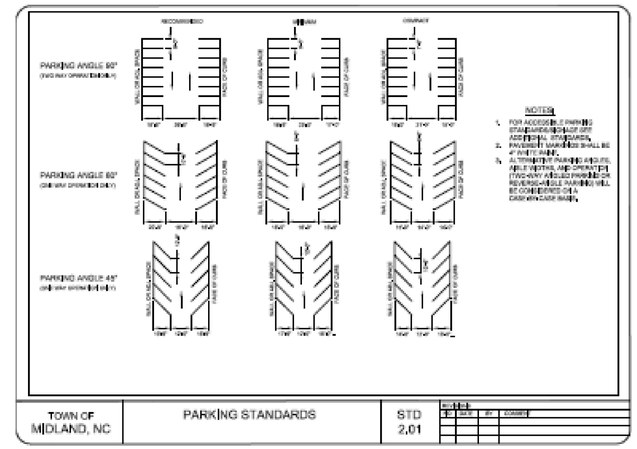

3/9 PARKING STANDARDS
SCALE: N.T.S.
[REF: TOWN OF MIDLAND STANDARDS MANUAL]

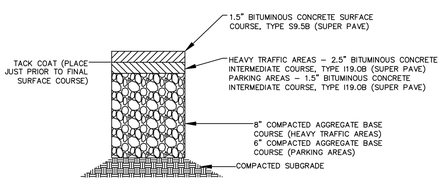

GENERAL NOTES:

1. SUBGRADE SHOULD BE TESTED BY AN INDEPENDENT TESTING LAB, AND SHOULD HAVE A DENSITY OF 100% IN ACCORDANCE WITH AASHTO–T99.
2. BASE COURSE MUST HAVE A DENSITY OF 90% FOR B.C.B.C. AND 100% FOR A.B.C. IN ACCORDANCE WITH AASHTO–T180.
3. SURFACE COURSE SHALL BE COMPACTED TO A DENSITY OF 95%.

2/9 PAVEMENT SECTION DETAIL
SCALE: N.T.S. [REF: MCLD STD. #10.01E]

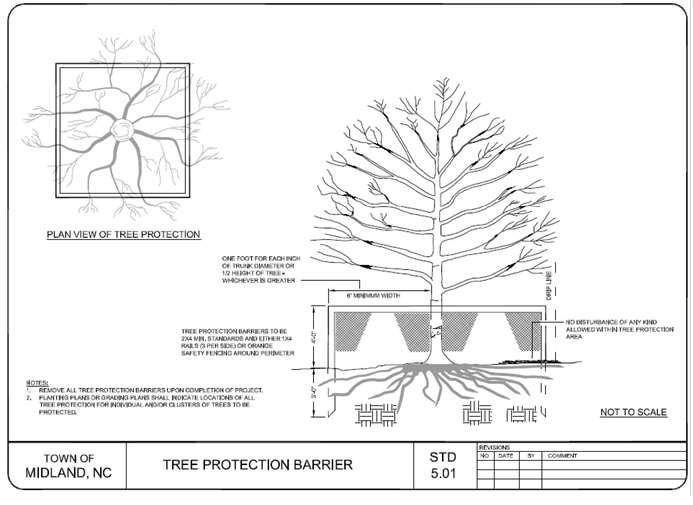

5/9 TREE PROTECTION BARRIER
SCALE: N.T.S.
[REF: TOWN OF MIDLAND STANDARDS MANUAL]

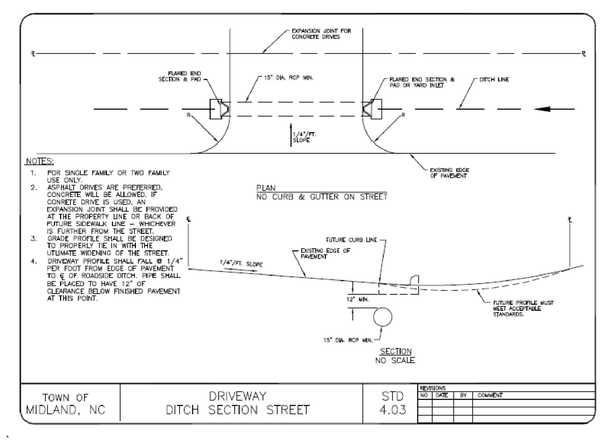

6/9 DRIVEWAY DITCH SECTION
SCALE: N.T.S.
[REF: TOWN OF MIDLAND STANDARDS MANUAL]

Amicus Partners, PLLC
Firm License # P–1191
331 Coddle Market Drive
Suite 110
Concord, NC 28027
Civil Site Design
Low Impact Development
Small–Scale Building Design
Telephone: 704.573.1621
Facsimile: 704.248.7951

Seals:

NORTH CAROLINA PROFESSIONAL SEAL 032006 ENGINEER NICHOLAS R. PARKER
05–13–2016

ROB WALLACE PARK
CABARRUS COUNTY, NORTH CAROLINA

FOR
MR. KYLE BILAFER
INFRASTRUCTURE AND ASSET MANAGEMENT
CABARRUS COUNTY GOVERNMENTAL CENTER
PO BOX 707
CONCORD, NC 28026

Project Number: 17–16–010
Date: △ 05–13–2016
Drawn By: CMM
Checked By: NRP

Revisions:

	04/20/16	Original Submittal
△	05/13/16	Per Developer

Sheet Title:

SITE DETAILS SHEET 1

Sheet No:

C-9.0

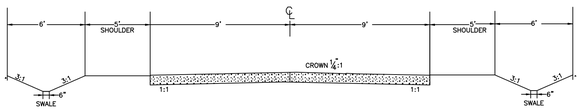

PROPOSED STREET SECTION (1 OF 2) (TYP.)

SCALE: N.T.S.

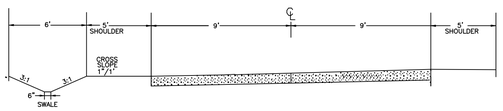

PROPOSED STREET SECTION (2 OF 2) (TYP.)

SCALE: N.T.S.

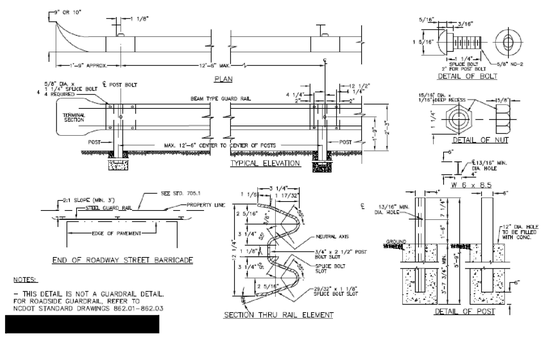

TEMPORARY DEAD END BARRICADE

SCALE: N.T.S.

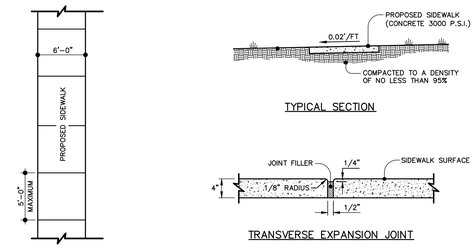

PLAN VIEW

NOTES:

1. TRANSVERSE EXPANSION JOINTS TO BE A MAXIMUM OF 50 FEET.
2. ALL CONCRETE TO BE FINISHED WITH CURING COMPOUND.
3. A 6 INCH DEPTH IS REQUIRED AT LOCATIONS OF DRIVEWAY CROSSINGS, AT STREET INTERSECTIONS (ALONG THE LENGTH OF RADIUS CURB RETURNS), AND IN THE HANDICAP RAMPS.

STANDARD CONCRETE SIDEWALK (TYP.)

SCALE: N.T.S.

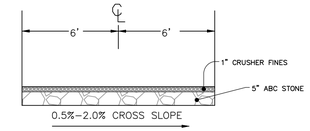

NOTES:

1. TRAIL WIDTH SHALL BE A MINIMUM OF 12'
2. TRAIL SHALL BE CLEARED AND GRUBBED OF VEGETATION USING A SKID STEER WITH MAXIMUM BUCKET WIDTH OF 10-FT.
3. CARE SHALL BE TAKEN TO PRESERVE TREES WITH A CALIPER GREATER THAN 4-INCHES (AS MEASURED AT EYE LEVEL). THE TRAIL MAY MEANDOR TO ACCOMODATE.
4. TRAIL SURFACE SHALL BE SCREENINGS.
5. TRAIL SHALL HAVE A CROSS SLOPE BETWEEN 0.5% AND 2.0%.

12' TRAIL SECTION (TYP.)

SCALE: N.T.S.

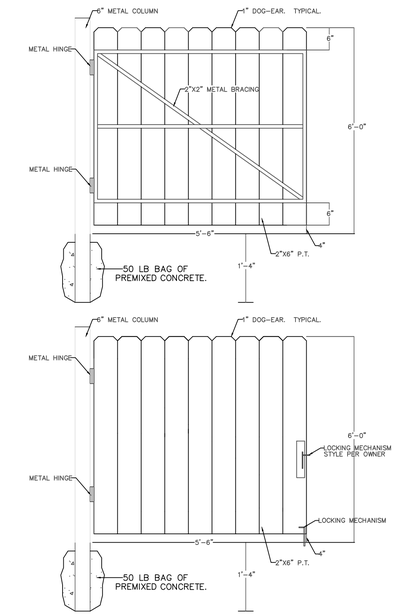

DUMPSTER GATE DETAIL

SCALE: N.T.S.

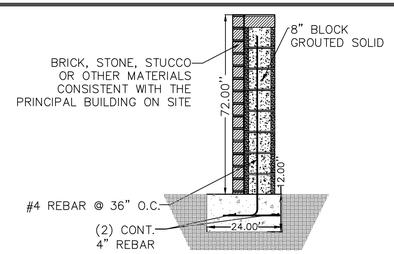

DUMPSTER/MECHANICAL EQUIPMENT SCREEN WALL DETAIL

SCALE: NOT TO SCALE

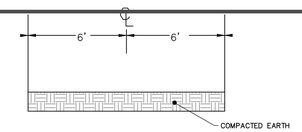

NOTES:

1. TRAIL WIDTH SHALL BE A MINIMUM OF 12'
2. TRAIL SHALL BE CLEARED AND GRUBBED OF VEGETATION USING A SKID STEER WITH MAXIMUM BUCKET WIDTH OF 10-FT.
3. CARE SHALL BE TAKEN TO PRESERVE TREES WITH A CALIPER GREATER THAN 4-INCHES (AS MEASURED AT EYE LEVEL). THE TRAIL MAY MEANDOR TO ACCOMODATE.

12' BIKE PATH SECTION (TYP.)

SCALE: N.T.S.

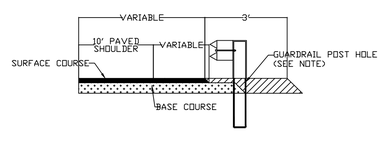

FLEXIBLE PAVED SHOULDER

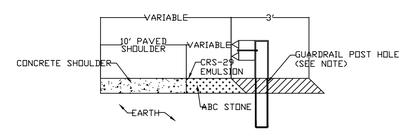

CONCRETE PAVED SHOULDER

EARTH MATERIAL

NOTE:
WHEN WOODEN GUARDRAIL POSTS ARE USED, DRILL HOLES THROUGH EARTH MATERIAL AND BASE COURSE. THE POST MAY THEN BE DRIVEN TO THE PROPER DEPTH. DRILL THE HOLE OF SUFFICIENT SIZE TO ACCOMMODATE THE PARTICULAR POST BEING USED. BACKFILL AND TAMP HOLES USING THE EXCAVATED MATERIAL.

GUARDRAIL PLACEMENT DETAIL

SCALE: N.T.S.

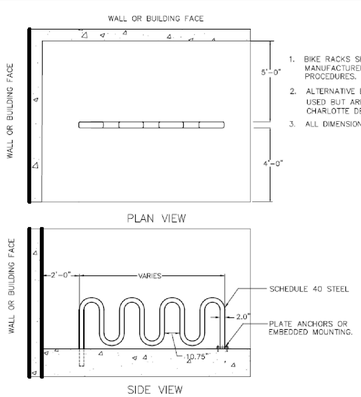

NOTES:

1. BIKE RACKS SHOULD BE INSTALLED AS PER MANUFACTURER'S RECOMMENDED INSTALLATION PROCEDURES.
2. ALTERNATIVE BIKE RACKS OR LOCKERS MAY BE USED BUT ARE SUBJECT TO APPROVAL BY THE CHARLOTTE DEPARTMENT OF TRANSPORTATION.
3. ALL DIMENSIONS SHOWN ARE MINIMUM.

U-SHAPED BIKE RACK

SCALE: N.T.S.

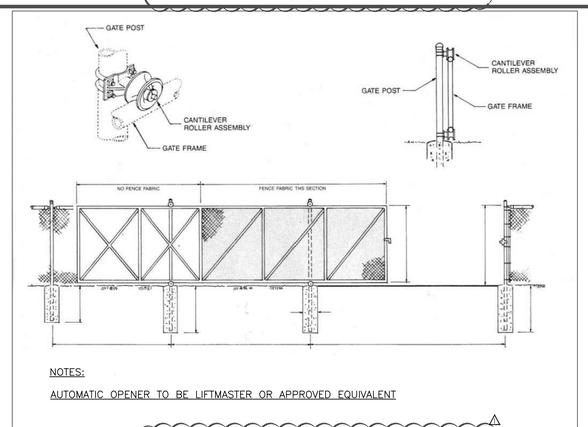

NOTES:

AUTOMATIC OPENER TO BE LIFTMASTER OR APPROVED EQUIVALENT

ROLLING ENTRANCE GATE

SCALE: N.T.S.

Amicus Partners, PLLC

Firm License # P-1191
331 Coddle Market Drive
Suite 110
Concord, NC 28027

Civil Site Design
Low Impact Development
Small-Scale Building Design

Telephone: 704.573.1621
Facsimile: 704.248.7951

Seals:

NORTH CAROLINA PROFESSIONAL SEAL 032006 ENGINEER NICHOLAS R. PARKER

05-13-2016

ROB WALLACE PARK
CABARRUS COUNTY, NORTH CAROLINA

FOR
MR. KYLE BILAFER
INFRASTRUCTURE AND ASSET MANAGEMENT
CABARRUS COUNTY GOVERNMENTAL CENTER
PO BOX 707
CONCORD, NC 28026

Project Number: 17-16-010

Date: △05-13-2016

Drawn By: CMM

Checked By: NRP

Revisions:

	04/20/16	Original Submittal
△	05/13/16	Per Developer

Sheet Title:

SITE DETAILS SHEET 2

Sheet No:

C-9.1

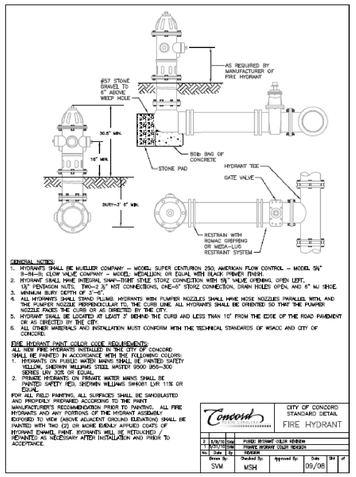

GENERAL NOTES:

1. HYDRANTS SHALL BE MUELLER COMPANY – MODEL SUPER CENTURION 250, AMERICAN FLOW CONTROL – MODEL 5A" B-84-B, CLOW VALVE COMPANY – MODEL MEDALLION; OR EQUAL WITH BLACK PRIMER FINISH.
2. HYDRANT SHALL HAVE INTERNAL SNAP-TIGHT STYLE STORZ CONNECTION WITH 5¼" VALVE, OPENING: OPEN LEFT, 1¾" FRONTAGON NUTS, TWO-2½" HOSE CONNECTIONS, ONE-5" STORZ CONNECTION, DRAIN HOLES OPEN, AND 6" MJ BRISE.
3. MINIMUM BURY DEPTH OF 3'-6".
4. ALL HYDRANTS SHALL STAND PLUMB. HYDRANTS WITH PUMPER NOZZLES SHALL HAVE HOSE NOZZLES PARALLEL WITH, AND FACING THE ROAD. ALL HYDRANTS SHALL HAVE ONE ELBOW. ALL HYDRANTS SHALL BE ORIENTED SO THAT THE PUMPER NOZZLE FACES THE CURB OR AS DIRECTED BY THE ENGINEER.
5. HYDRANT SHALL BE LOCATED AT LEAST 7' BEHIND THE CURB AND LESS THAN 10' FROM THE EDGE OF THE ROAD PAVEMENT OR AS DIRECTED BY THE CITY.
6. ALL OTHER MATERIALS AND INSTALLATION MUST CONFORM WITH THE TECHNICAL STANDARDS OF WSACC AND CITY OF CONCORD.

FIRE HYDRANT PAINT COLOR CODE REQUIREMENTS:
ALL NEW FIRE HYDRANTS INSTALLED IN THE CITY OF CONCORD SHALL BE PAINTED IN ACCORDANCE WITH THE FOLLOWING COLORS:
1. HYDRANTS ON END OF WATER MAINS SHALL BE PAINTED SAFETY FIELD GREEN, HYDRAMAX WILLIAMS SHEEN 1-7-1 STEEL MASTER 9500 355-300 SERIES URV SUN OR EQUAL.
2. PRIVATE HYDRANTS ON PRIVATE WATER MAINS SHALL BE PAINTED SAFETY RED, HYDRAMAX WILLIAMS SHEEN 1-7-1 STEEL MASTER 9500 355-300 OR EQUAL.

FOR ALL FIELD PAINTING, ALL SURFACES SHALL BE SANDBLASTED AND PRIMED WITH PRIMER SPECIFIED BY THE FIRE HYDRANT MANUFACTURER'S RECOMMENDATION PRIOR TO PAINTING. ALL FIRE HYDRANTS AND ANY PORTIONS OF THE HYDRANT ASSEMBLY EXPOSED TO VIEW (ABOVE ADJACENT GROUND ELEVATION) SHALL BE PAINTED WITH TWO (2) OR MORE EVENLY APPLIED COATS OF HYDRAMAX ENAMEL. PAINT HYDRANTS WELL BE RETOUCHED HYDRANTS AS NECESSARY AFTER INSTALLATION AND PRIOR TO ACCEPTANCE.

1 FIRE HYDRANT DETAIL
10 SCALE: N.T.S. [REF: CITY OF CONCORD]

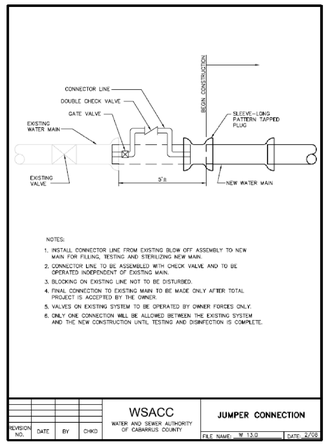

NOTES:

1. INSTALL CONNECTOR LINE FROM EXISTING BLOW OFF ASSEMBLY TO NEW MAIN FOR FILLING, TESTING AND STERILIZING NEW MAIN.
2. CONNECTOR LINE TO BE ASSEMBLED WITH CHECK VALVE, AND TO BE OPERATED INDEPENDENT OF EXISTING MAIN.
3. BLOCKING ON EXISTING LINE NOT TO BE DISTURBED.
4. FINAL CONNECTION TO EXISTING MAIN TO BE MADE ONLY AFTER TOTAL PROJECT IS ACCEPTED BY THE OWNER
5. VALVES ON EXISTING SYSTEM TO BE OPERATED BY OWNER FORCES ONLY.
6. ONLY ONE CONNECTION WILL BE ALLOWED BETWEEN THE EXISTING SYSTEM AND THE NEW CONSTRUCTION UNTIL TESTING AND DISINFECTION IS COMPLETE.

12 JUMPER CONNECTION DETAIL
10 REF: WSACC (NOT TO SCALE)

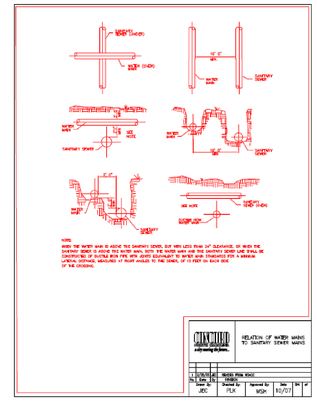

3 RELATIONSHIP OF WATER MAINS TO SANITARY SEWER
10 REF: CITY OF CONCORD (NOT TO SCALE)

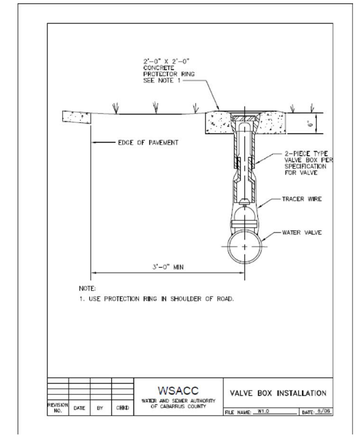

4 VALVE BOX DETAIL
10 SCALE: N.T.S. [REF: W.S.A.C.C.]

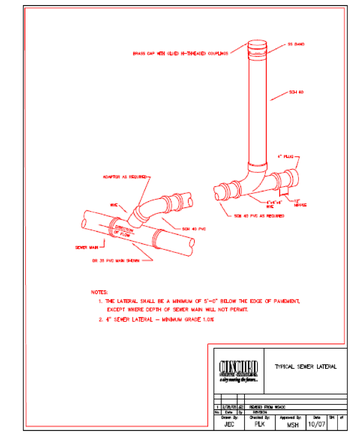

5 TYPICAL SEWER LATERAL DETAIL
10 SCALE: N.T.S. [REF: CITY OF CONCORD]

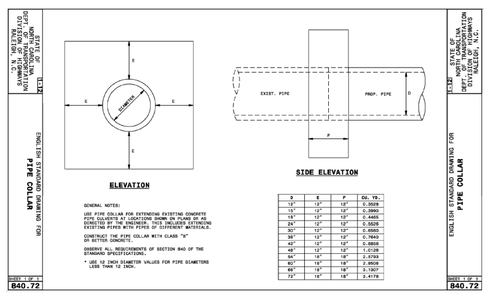

D	E	F	Cu. Yd.
12"	12"	12"	0.3529
15"	12"	12"	0.3889
18"	12"	12"	0.4259
24"	12"	12"	0.4609
30"	12"	12"	0.5860
36"	12"	12"	0.7640
42"	12"	12"	0.8859
48"	12"	12"	1.0129
54"	12"	12"	1.1399
60"	12"	12"	1.2669
66"	12"	12"	1.3907
72"	12"	12"	1.4179

2 PIPE COLLAR DETAIL
10 SCALE: N.T.S. [REF: NCDOT #840.72]

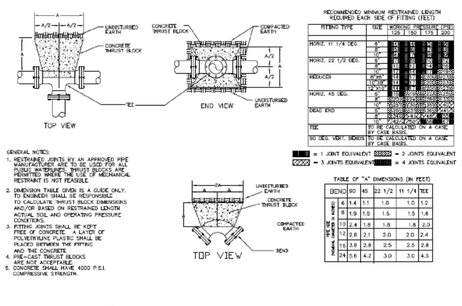

7 THRUST BLOCK FOR FITTINGS & RESTRAINING
10 SCALE: N.T.S.

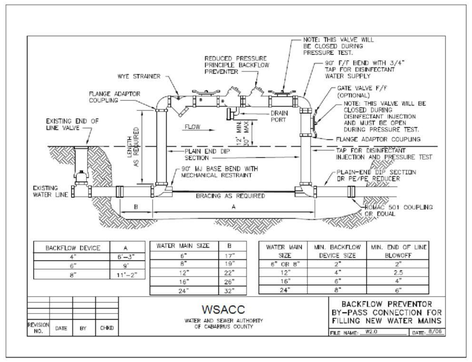

BACKFLOW DEVICE	A
4"	6'-3"
6"	9'
8"	11'-2"

WATER MAIN SIZE	B
6"	17"
8"	19"
12"	22"
16"	26"
24"	32"

WATER MAIN SIZE	MIN. BACKFLOW DEVICE SIZE	MIN. END OF LINE BLOWOFF
6" OR 8"	2"	2"
12"	4"	2.5
16"	6"	4"
24"	8"	6"

11 BACKFLOW PREVENTOR BY-PASS CONNECTION FOR FILLING NEW WATER MAINS
10 REF: WSACC (NOT TO SCALE)

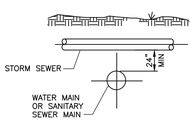

NOTE:

WHEN A WATER MAIN OR SANITARY SEWER MAIN CROSSES OVER OR UNDER A STORM SEWER AND CONDITIONS PREVENT THE REQUIRED 18" MIN VERTICAL SEPARATION, THE WATER MAIN OR SANITARY SEWER MAIN SHALL BE CONSTRUCTED OF DUCTILE IRON PIPE WITH JOINTS EQUIVALENT TO WATER MAIN STANDARDS FOR A MINIMUM DISTANCE OF 10 FEET ON EACH SIDE OF THE POINT OF CROSSING.

6 RELATIONSHIP OF WATER MAIN AND SANITARY SEWER TO STORM SEWER DETAIL
10 REF: CITY OF CONCORD (NOT TO SCALE)

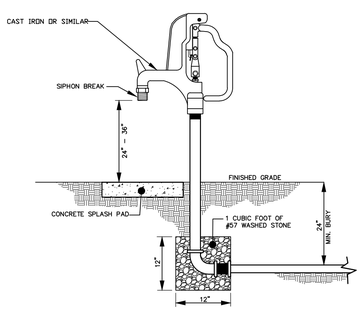

7 FROST PROOF YARD HYDRANT (TYP.)
10 SCALE: NTS

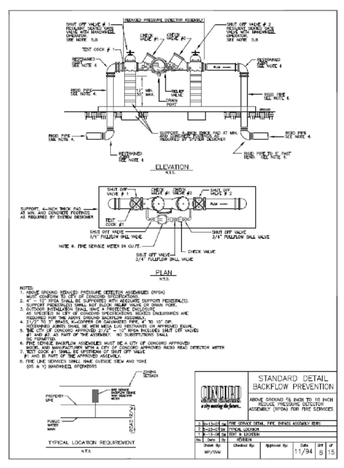

8 ABOVE GROUND 2.5" TO 10" RPDA DETAIL
10 REF: CITY OF CONCORD (NOT TO SCALE)

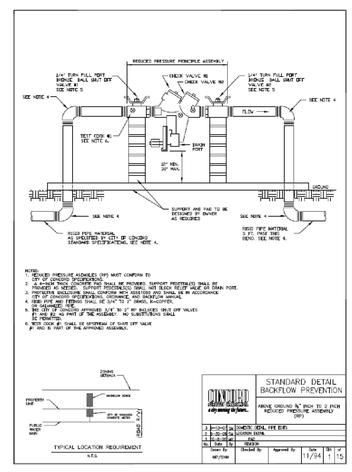

9 3/4"–2" REDUCED PRESSURE PRINCIPLE ASSEMBLY
10 REF: CITY OF CONCORD (NOT TO SCALE)

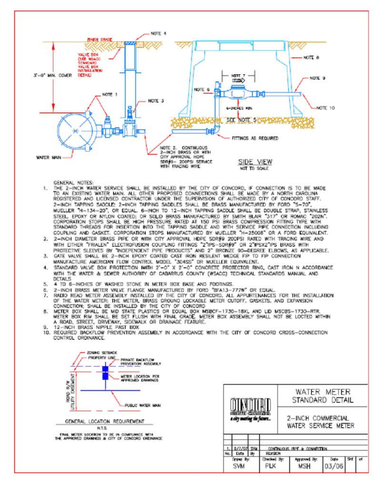

10 2" COMMERCIAL WATER SERVICE METER
10 REF: CITY OF CONCORD (NOT TO SCALE)

Amicus Partners, PLLC
Firm License # P-1191
331 Coddle Market Drive
Suite 110
Concord, NC 28027
Civil Site Design
Low Impact Development
Small-Scale Building Design
Telephone: 704.573.1621
Facsimile: 704.248.7951

Seals:

NORTH CAROLINA PROFESSIONAL SEAL 032006 ENGINEER NICHOLAS R. HARPER

05-13-2016

ROB WALLACE PARK
CABARRUS COUNTY, NORTH CAROLINA

FOR
MR. KYLE BILAFER
INFRASTRUCTURE AND ASSET MANAGEMENT
CABARRUS COUNTY GOVERNMENTAL CENTER
PO BOX 707
CONCORD, NC 28026

Project Number: 17-16-010

Date: △05-13-2016

Drawn By: CMM

Checked By: NRP

Revisions:

	04/20/16	Original Submittal
△	05/13/16	Per Developer

Sheet Title:

UTILITY DETAILS SHEET 1

Sheet No:

C-10.0

SEDIMENT BASIN DESIGN CRITERIA	
DRAINAGE AREA (ACRES)	< 5 AC.
MIN. LENGTH TO WIDTH RATIO	2:1
MAX. LENGTH TO WIDTH RATIO	6:1
MIN. VOLUME REQUIRED	3600(CU. FT. PER AC. DISTURBED)
SURFACE AREA REQUIRED	435 (SQ. FT. PER CFS Q10)

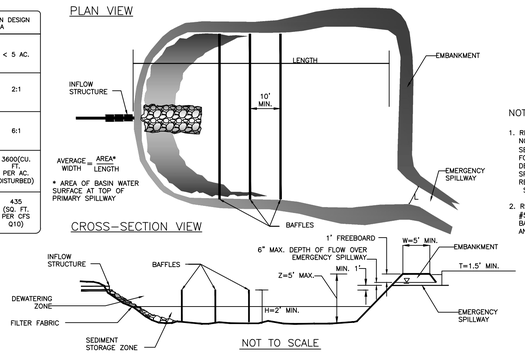

NOTES:

1. REFER TO NCESCPM SECTION #6.64 FOR ADDITIONAL DESIGN SPECIFICATIONS REGARDING SEDIMENT TRAPS
2. REFER TO STD. #524.1 FOR BAFFLE SPACING AND INSTALLATION.

SEDIMENT TRAP DATA BLOCK

SKIMMER TRAP	GOVERNING PHASE	DRAINAGE AREA (ACRES)	DENUDED AREA (ACRES)	Qw	BASIN VOLUME REQUIRED (CUBIC FT.)	BASIN VOLUME PROVIDED (CUBIC FT.)	BASIN SURFACE AREA REQUIRED (SQ FT.)	BASIN SURFACE AREA PROVIDED (SQ FT)	CLEANOUT DEPTH (FT.) H/2	H (FEET)	Z (FEET)	L (FEET)	T (FEET)	W (FEET)
ST-3	PHASE II	0.50	0.50	1.85	1,800	1,853	787	1,155	1.00	2.0	5.0	4.0	1.5	5.0
ST-4	PHASE II	0.80	0.80	3.89	2,880	4,291	1,653	2,497	1.00	2.0	5.0	4.0	1.5	5.0

1 / 11.0 Sediment Trap Detail

Ref: NCDEQ #6.60.3

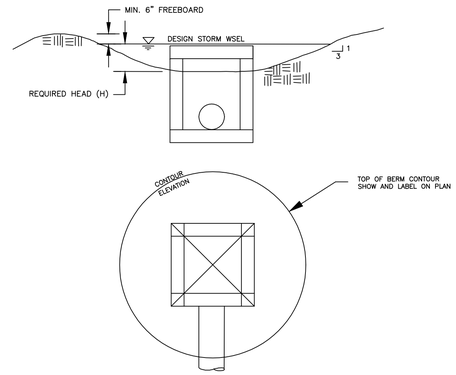

6 / 11.0 Grading for Drop Inlet Detail

Ref: MCLDS Standard #20.35

GENERAL NOTES:

1. A STABILIZED ENTRANCE PAD OF #5 WASHED STONE OR RAIL ROAD BALLAST SHALL BE LOCATED WHERE TRAFFIC WILL ENTER OR LEAVE THE CONSTRUCTION SITE ONTO A PUBLIC STREET.
2. FILTER FABRIC OR COMPACTED CRUSHER RUN STONE SHALL BE USED AS A BASE FOR THE CONSTRUCTION ENTRANCE.
3. THE ENTRANCE SHALL BE MAINTAINED IN A CONDITION WHICH WILL PREVENT TRACKING OR FLOWING OF SEDIMENT ONTO PUBLIC STREETS OR EXISTING PAVEMENT. THIS MAY REQUIRE PERIODIC TOP DRESSING WITH ADDITIONAL STONE AS CONDITIONS WARRANT AND REPAIR OR CLEANOUT OF ANY MEASURES USED TO TRAP SEDIMENT.
4. ANY SEDIMENT SPILLED, DROPPED, WASHED, OR TRACKED ONTO PUBLIC STREETS MUST BE REMOVED IMMEDIATELY.
5. WHEN APPROPRIATE, WHEELS MUST BE CLEANED TO REMOVE SEDIMENT PRIOR TO ENTERING A PUBLIC STREET. WHEN WASHING IS REQUIRED, IT SHALL BE DONE IN AN AREA STABILIZED WITH CRUSHED STONE WHICH DRAINS INTO AN APPROVED SEDIMENT BASIN. SEE STD. NO. 515.1.
6. TOWN MAY REQUIRE A STANDARD COMMERCIAL DRIVEWAY TO ACCESS THE CONSTRUCTION SITE IF THE DRIVEWAY IS ON A THOROUGHFARE.

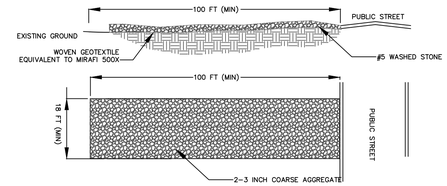

3 / 11.0 Construction Entrance Detail

Ref: NCDEQ #6.06.1

1) GROUND STABILIZATION*

SITE AREA DESCRIPTION	STABILIZATION TIME FRAME	STABILIZATION TIME FRAME EXCEPTIONS
PERIMETER DIKES, SWALES, DITCHES AND SLOPES	7 DAYS	NONE
HIGH QUALITY WATER (HQW) ZONES	7 DAYS	NONE
SLOPES 3:1 OR FLATTER	7 DAYS	IF SLOPES ARE 10' OR LESS IN LENGTH AND ARE NOT STEEPER THAN 2:1, 14 DAYS ARE ALLOWED.
SLOPES 3:1 OR FLATTER	14 DAYS	7-DAYS FOR SLOPES GREATER THAN 50 FEET IN LENGTH
ALL OTHER AREAS WITH SLOPES FLATTER THAN 4:1	14 DAYS	NONE (EXCEPT FOR PERIMETERS AND HQW ZONES)

*"EXTENSIONS OF TIME MAY BE APPROVED BY THE PERMITTING AUTHORITY BASED ON WEATHER OR OTHER SITE-SPECIFIC CONDITIONS THAT MAKE COMPLIANCE IMPRACTICABLE." (SECTION II.B(2)(b))

REFERENCE: NORTH CAROLINA DIVISION OF WATER QUALITY (DWQ) CONSTRUCTION GENERAL PERMIT (NCG01)

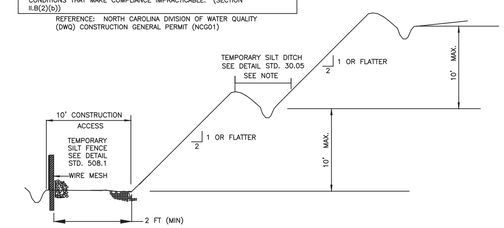

4 / 11.0 Slope Stability

Ref: MCLDS Standard #30.16

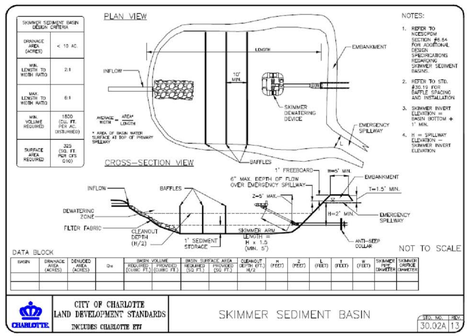

SEDIMENT TRAP DATA BLOCK

SKIMMER TRAP	GOVERNING PHASE	DRAINAGE AREA (ACRES)	DENUDED AREA (ACRES)	Qw	BASIN VOLUME REQUIRED (CUBIC FT.)	BASIN VOLUME PROVIDED (CUBIC FT.)	BASIN SURFACE AREA REQUIRED (SQ FT.)	BASIN SURFACE AREA PROVIDED (SQ FT.)	CLEANOUT DEPTH (FT.) H/2	H (FEET)	Z (FEET)	L (FEET)	T (FEET)	W (FEET)	SKIMMER PIPE DIAMETER	SKIMMER ORIFICE DIAMETER	SKIMMER ORIFICE RADIUS
SST-1	PHASE II	2.57	2.57	11.01	4,626	11,863	3,578	4,825	1.00	2.0	3.5	12.0	1.5	5.0	2.0"	0.8"	1.6"
SST-2	PHASE II	2.5	2.5	10.71	4,500	11,553	3,481	5,714	1.00	2.0	3.5	12.0	2.5	5.0	2.0"	0.8"	1.6"

5 / 11.0 Skimmer Sediment Trap Detail

Ref: CMLDS #30.02A

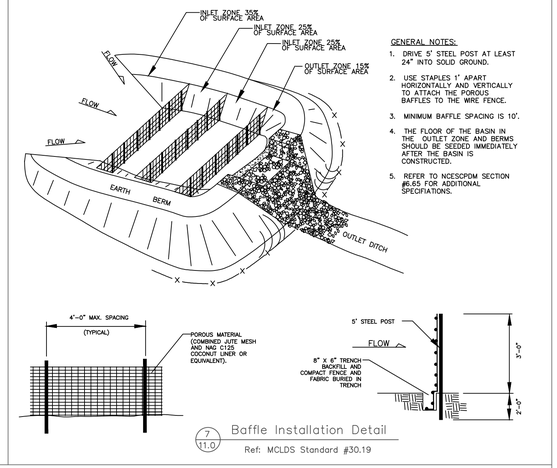

GENERAL NOTES:

1. DRIVE 5' STEEL POST AT LEAST 24" INTO SOLID GROUND.
2. USE STAPLES 1' APART HORIZONTALLY AND VERTICALLY TO ATTACH THE POROUS BAFFLES TO THE WIRE FENCE.
3. MINIMUM BAFFLE SPACING IS 10'.
4. THE FLOOR OF THE BASIN IN THE OUTLET ZONE AND BERMS SHOULD BE SEEDED IMMEDIATELY AFTER THE BASIN IS CONSTRUCTED.
5. REFER TO NCESCPDM SECTION #6.65 FOR ADDITIONAL SPECIFIATIONS.

7 / 11.0 Baffle Installation Detail

Ref: MCLDS Standard #30.19

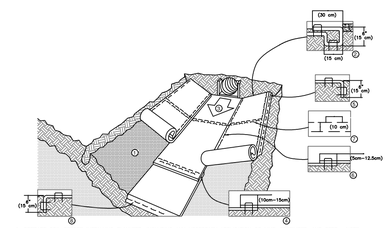

1. PREPARE SOIL BEFORE INSTALLING BLANKETS, INCLUDING ANY NECESSARY APPLICATION OF LIME, FERTILIZER, AND SEED. NOTE: WHEN USING CELL-O-SEED DO NOT SEED PREPARED AREA. CELL-O-SEED MUST BE INSTALLED WITH PAPER SIDE DOWN.
2. BEGIN AT THE TOP OF THE CHANNEL BY ANCHORING THE BLANKET IN A 6" (15cm) DEEP X 6" (15cm) WIDE TRENCH WITH APPROXIMATELY 12" (30cm) OF BLANKET EXTENDED BEYOND THE UP-SLOPE PORTION OF THE TRENCH. ANCHOR THE BLANKET WITH A ROW OF STAPLES/STAKES APPROXIMATELY 12" (30cm) APART IN THE BOTTOM OF THE TRENCH. BACKFILL AND COMPACT THE TRENCH AFTER STAPLING. APPLY SEED TO COMPACTED SOIL AND FOLD REMAINING 12" (30cm) PORTION OF BLANKET BACK OVER SEED AND COMPACTED SOIL. SECURE BLANKET OVER COMPACTED SOIL WITH A ROW OF STAPLES/STAKES SPACED APPROXIMATELY 12" (30cm) APART ACROSS THE WIDTH OF THE BLANKET.
3. ROLL CENTER BLANKET IN DIRECTION OF WATER FLOW IN BOTTOM OF CHANNEL. BLANKETS WILL UNROLL WITH APPROPRIATE SIDE AGAINST THE SOIL SURFACE. ALL BLANKETS MUST BE SECURELY FASTENED TO SOIL SURFACE BY PLACING STAPLES/STAKES IN APPROPRIATE LOCATIONS AS SHOWN IN THE STAPLE PATTERN GUIDE. WHEN USING OPTIONAL DOT SYSTEM™, STAPLES/STAKES SHOULD BE PLACED THROUGH EACH OF THE COLORED DOTS CORRESPONDING TO THE APPROPRIATE STAPLE PATTERN.
4. PLACE CONSECUTIVE BLANKETS END OVER END (SHINGLE STYLE) WITH A 4"-6" (10cm-15cm) OVERLAP. USE A DOUBLE ROW OF STAPLES STAGGERED 4" (10cm) APART AND 4" (10cm) ON CENTER TO SECURE BLANKETS.
5. FULL LENGTH EDGE OF BLANKETS AT TOP OF SIDE SLOPES MUST BE ANCHORED WITH A ROW OF STAPLES/STAKES APPROXIMATELY 12" (30cm) APART IN A 6" (15cm) DEEP X 6" (15cm) WIDE TRENCH. BACKFILL AND COMPACT THE TRENCH AFTER STAPLING.
6. ADJACENT BLANKETS MUST BE OVERLAPPED APPROXIMATELY 2"-5" (5cm-12.5cm) (DEPENDING ON BLANKET TYPE) AND STAPLED. TO ENSURE PROPER SEAM ALIGNMENT, PLACE THE EDGE OF THE OVERLAPPING BLANKET (BLANKET BEING INSTALLED ON TOP) EVEN WITH THE COLORED SEAM STITCH™ ON THE BLANKET BEING OVERLAPPED.
7. IN HIGH FLOW CHANNEL APPLICATIONS, A STAPLE CHECK SLOT IS RECOMMENDED AT 30 TO 40 FOOT (9m-12m) INTERVALS. USE A DOUBLE ROW OF STAPLES STAGGERED 4" (10cm) APART AND 4" (10cm) ON CENTER OVER ENTIRE WIDTH OF THE CHANNEL.
8. THE TERMINAL END OF THE BLANKETS MUST BE ANCHORED WITH A ROW OF STAPLES/STAKES APPROXIMATELY 12" (30cm) APART IN A 6" (15cm) DEEP X 6" (15cm) WIDE TRENCH. BACKFILL AND COMPACT THE TRENCH AFTER STAPLING.

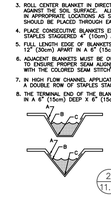

CRITICAL POINTS
A. OVERLAPS AND SEAMS
B. PROJECTED WATER LINE
C. CHANNEL BOTTOM/SIDE SLOPE VERTICES

NOTE:
* HORIZONTAL STAPLE SPACING SHOULD BE ALTERED IF NECESSARY TO ALLOW STAPLES TO SECURE THE CRITICAL POINTS ALONG THE CHANNEL SURFACE.

** IN LOOSE SOIL CONDITIONS, THE USE OF STAPLE GUARDS MAY BE NECESSARY TO PREVENT PULL-OUT. STAPLE GUARDS MAY BE NECESSARY TO PROPERLY ANCHOR THE BLANKETS.

2 / 11.0 Liner Installation Detail

Scale: NTS

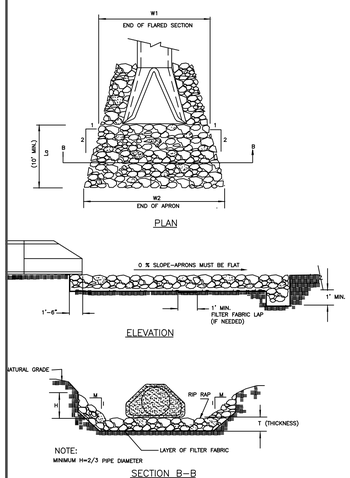

9 / 11.0 Riprap Apron Detail

Ref: MCLDS Standard #20.23

NOTES:

1. CLASS OR MEDIAN SIZE OF RIPRAP AND LENGTH, WIDTH AND DEPTH OF APRON TO BE DESIGNED BY THE ENGINEER.
2. REFER TO THE CHARLOTTE MECKLENBURG STORM WATER DESIGN MANUAL FOR RIPRAP APRON DESIGN STANDARDS.
3. RIPRAP SHOULD EXTEND UP BOTH SIDES OF THE APRON AND AROUND THE END OF THE PIPE OR CULVERT AT THE DISCHARGE OUTLET AT A MAXIMUM SLOPE OF 2:1 AND A HEIGHT NOT LESS THAN TWO THIRDS THE PIPE DIAMETER OR CULVERT HEIGHT.
4. THERE SHALL BE NO OVERFLOW FROM THE END OF THE APRON TO THE SURFACE OF THE RECEIVING CHANNEL. THE AREA TO BE PAVED OR RIPRAPPED SHALL BE UNDERCUT SO THAT THE INVERT OF THE APRON SHALL BE AT THE SAME GRADE (FLUSH) WITH THE SURFACE OF THE RECEIVING CHANNEL. THE APRON SHALL HAVE A CUTOFF OR TOE WALL AT THE DOWNSTREAM END.
5. THE WIDTH OF THE END OF THE APRON SHALL BE EQUAL TO THE BOTTOM WIDTH OF THE RECEIVING CHANNEL. MAXIMUM TAPER TO RECEIVING CHANNEL 5:1
6. ALL SUBGRADE FOR STRUCTURE TO BE COMPACTED TO 95% OR GREATER.
7. THE PLACING OF FILL, EITHER LOOSE OR COMPACTED IN THE RECEIVING CHANNEL SHALL NOT BE ALLOWED.
8. NO BENDS OR CURVES IN THE HORIZONTAL ALIGNMENT OF THE APRON WILL BE PERMITTED.
9. FILTER FABRIC SHALL BE INSTALLED ON COMPACTED SUBGRADE PRIOR TO PLACEMENT OF RIP RAP.
10. ANY DISTURBED AREA FROM END OF APRON TO RECIEVING CHANNEL MUST BE STABILIZED.

USE USDA NOMOGRAPH FROM NC SEDIMENT AND EROSION CONTROL MANUAL OR CHARLOTTE MECKLENBURG STORM WATER DESIGN MANUAL FOR DESIGN DATA.

ALL RIPRAP SHALL BE CLASS B OR ENGINEER APPROVED.

APRON	D(FT)	La(FT)	W1(FT)	W2(FT)	T(IN)	D50(IN)	DMAX(IN)	H (IN)
FES-1	2.0	13.0	6.0	15.0	13.5	6.0	9.0	16.0
FES-2	1.5	9.0	4.5	10.5	9.0	4.0	6.0	12.0

* D = diameter of pipe
* d50 (see fig 8.06 ddb "NC SEDIMENT AND EROSION CONTROL MANUAL"
  dmax = 1.5 x d50
  T = 1.5 X dmax.

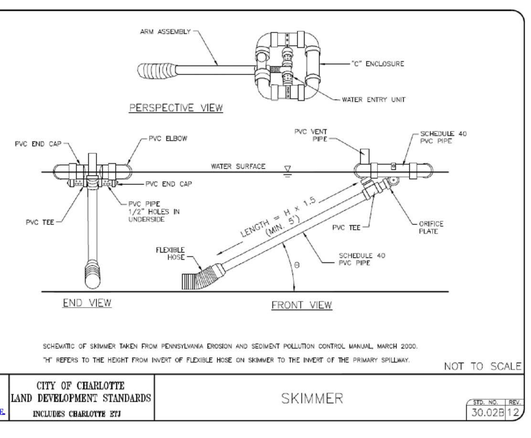

8 / 11.0 Skimmer Detail

Ref: NCDEQ #6.60.3

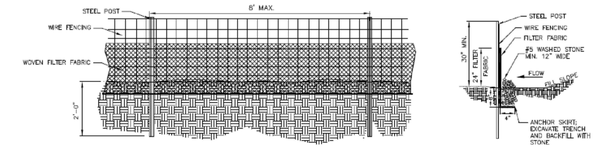

GENERAL NOTES:

1. FILTER FABRIC FENCE SHALL BE A MINIMUM OF 32" IN WIDTH AND SHALL HAVE A MINIMUM OF 6 LINE WIRES WITH 12" STAY SPACING.
2. WOVEN FILTER FABRIC BE USED WHERE SILT FENCE IS TO REMAIN FOR A PERIOD OF MORE THAN 30 DAYS.
3. STEEL POSTS SHALL BE 5'-0" IN HEIGHT AND BE OF THE SELF-FASTENER ANGLE STEEL TYPE.
4. WIRE FENCING SHALL BE AT LEAST #10 GAGE WITH A MINIMUM OF 6 LINE WIRES WITH 6" STAY SPACING.
5. TURN SILT FENCE UP SLOPE AT ENDS.
6. WIRE AND WASHED STONE IS REQUIRED TO BE SHOWN ON PLANS AT THE TOE OF SLOPES GREATER THAN 10 FEET VERTICAL (2:1 SLOPE).
7. ORANGE SAFETY FENCE IS REQUIRED AT BACK OF SILT FENCE WHEN GRADING IS ADJACENT TO SWIM BUFFERS, STREAMS OR WETLANDS (REFER TO SWIM BUFFER GUIDELINES). THE COLOR ORANGE IS RESERVED FOR VISUAL IDENTIFICATION OF ENVIRONMENTALLY SENSITIVE AREAS.
8. DRAINAGE AREA CAN NOT BE GREATER THAN 1/4 ACRE PER 100 FT OF FENCE.
9. SLOPE LENGTHS CAN NOT EXCEED CRITERIA SHOWN IN TABLE 6.62A NORTH CAROLINA EROSION AND SEDIMENT CONTROL PLANNING AND DESIGN MANUAL.
10. DO NOT INSTALL SEDIMENT FENCE ACROSS STREAMS, DITCHES, WATERWAYS OR OTHER AREAS OF CONCENTRATED FLOW.

MAINTENANCE NOTES:

1. FILTER BARRIERS SHALL BE INSPECTED BY THE FINANCIALLY RESPONSIBLE PARTY OR HIS AGENT IMMEDIATELY AFTER EACH RAINFALL AND AT LEAST DAILY DURING PROLONGED RAINFALL. ANY REPAIRS NEEDED SHALL BE MADE IMMEDIATELY.
2. SHOULD THE FABRIC DECOMPOSE OR BECOME INEFFECTIVE PRIOR TO THE END OF THE EXPECTED USABLE LIFE AND THE BARRIER STILL IS NECESSARY, THE FABRIC SHALL BE REPLACED PROMPTLY.
3. SEDIMENT DEPOSITS SHOULD BE REMOVED WHEN DEPOSITS REACH HALF THE HEIGHT OF THE BARRIER. ANY SEDIMENT DEPOSITS REMAINING IN PLACE AFTER THE SILT FENCE IS REMOVED SHALL BE DRESSED TO CONFORM TO THE EXISTING GRADE, PREPARED AND SEEDED.

10 / 11.0 High Hazard Silt Fence Detail

N.T.S.

Amicus Partners, PLLC
Firm License # P-1191
331 Coddle Market Drive
Suite 110
Concord, NC 28027
Civil Site Design
Low Impact Development
Small-Scale Building Design
Telephone: 704.573.1621
Facsimile: 704.248.7951

Seals:

NORTH CAROLINA PROFESSIONAL SEAL 032006 ENGINEER NICHOLAS R. PARKER

05-13-2016

ROB WALLACE PARK
CABARRUS COUNTY, NORTH CAROLINA

FOR
MR. KYLE BILAFER
INFRASTRUCTURE AND ASSET MANAGEMENT
CABARRUS COUNTY GOVERNMENTAL CENTER
PO BOX 707
CONCORD, NC 28026

Project Number: 17-16-010

Date: 05-13-2016

Drawn By: CMM

Checked By: NRP

Revisions:

	04/20/16	Original Submittal
1	05/13/16	Per Developer

Sheet Title:

EROSION / DRAINAGE DETAILS

Sheet No:

C-11.0

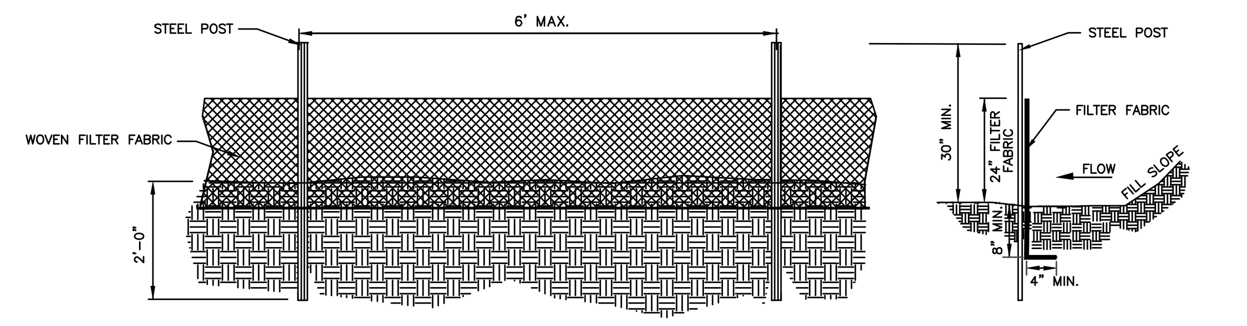

GENERAL NOTES:

1. FILTER FABRIC FENCE SHALL BE A MINIMUM OF 32" IN WIDTH AND SHALL HAVE A MINIMUM OF 6 LINE WIRES WITH 12" STAY SPACING.

2. WOVEN FILTER FABRIC BE USED WHERE SILT FENCE IS TO REMAIN FOR A PERIOD OF MORE THAN 30 DAYS.

3. STEEL POSTS SHALL BE 5'–0" IN HEIGHT AND BE OF THE SELF–FASTENER ANGLE STEEL TYPE.

4. TURN SILT FENCE UP SLOPE AT ENDS.

5. ORANGE SAFETY FENCE IS REQUIRED AT BACK OF SILT FENCE WHEN GRADING IS ADJACENT TO SWIM BUFFERS, STREAMS OR WETLANDS (REFER TO SWIM BUFFER GUIDELINES). THE COLOR ORANGE IS RESERVED FOR VISUAL IDENTIFICATION OF ENVIRONMENTALLY SENSITIVE AREAS.

6. DRAINAGE AREA CAN NOT BE GREATER THAN 1/4 ACRE PER 100 FT OF FENCE.

7.SLOPE LENGTHS CAN NOT EXCEED CRITERIA SHOWN IN TABLE 6.62A NORTH CAROLINA EROSION AND SEDIMENT CONTROL PLANNING AND DESIGN MANUAL.

8.DO NOT INSTALL SEDIMENT FENCE ACROSS STREAMS, DITCHES, WATERWAYS OR OTHER AREAS OF CONCENTRATED FLOW.

MAINTENANCE NOTES:

1. FILTER BARRIERS SHALL BE INSPECTED BY THE FINANCIALLY RESPONSIBLE PARTY OR HIS AGENT IMMEDIATELY AFTER EACH RAINFALL AND AT LEAST DAILY DURING PROLONGED RAINFALL. ANY REPAIRS NEEDED SHALL BE MADE IMMEDIATELY.

2. SHOULD THE FABRIC DECOMPOSE OR BECOME INEFFECTIVE PRIOR TO THE END OF THE EXPECTED USABLE LIFE AND THE BARRIER STILL IS NECESSARY, THE FABRIC SHALL BE REPLACED PROMPTLY.

3. SEDIMENT DEPOSITS SHOULD BE REMOVED WHEN DEPOSITS REACH HALF THE HEIGHT OF THE BARRIER. ANY SEDIMENT DEPOSITS REMAINING IN PLACE AFTER THE SILT FENCE IS REMOVED SHALL BE DRESSED TO CONFORM TO THE EXISTING GRADE, PREPARED AND SEEDED.

1/11.1 Silt Fence Detail

Ref: NCDEQ #6.62.5

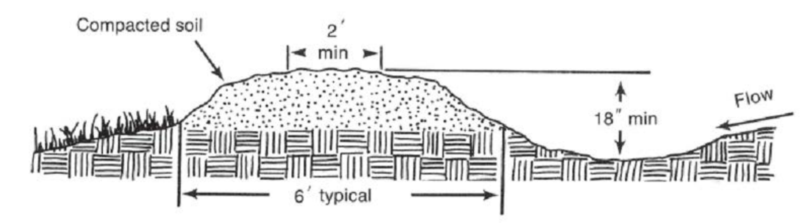

Figure 6.20a Temporary earthen diversion dike.

6.20.1

DESIGN CRITERIA

DRAINAGE AREA – 5 ACRES OR LESS

CAPACITY – PEAK RUNOFF FROM 10–YR STORM

VELOCITY – SEE TABLE 8.05A. PERMISSIBLE VELOCITIES FOR EROSION PROTECTION. APPENDIX 8.05.

RIDGE DESIGN – SIDE SLOPE: 2:1 OR FLATTER
3:1 OR FLATTER
TOP WIDTH: 2 FT MINIMUM
FREEBOARD: 0.3 FT MINIMUM
SETTLEMENT: 10% OF TOTAL FILL HEIGHT MINIMUM

CHANNEL DESING – SHAPE: PARABOLIC, TRAPEZOIDAL, OR V–SHAPED

SIDE SLOPE: 2:1 OR FLATTER
3:1 OR FLATTER WHERE VEHICLES CROSS

3/11.1 Temporary Silt Ditch

Ref: NCDEQ 6.20A

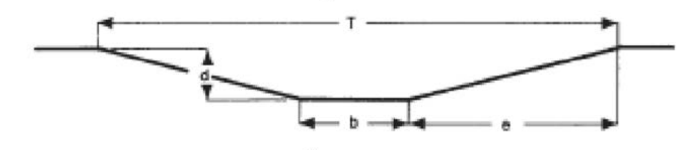

x-section area (A) = bd + Zd²
top width (T) = b + 2dz

$Z = \frac{e}{d}$

GENERAL NOTES:

1. REMOVE ALL TREES, BRUSH, STUMPS, AND OTHER OBJECTIONABLE MATERIAL FROM THE FOUNDATION AREA, AND DISPOSE OF PROPERLY.
2. EXCAVATE THE CHANNEL, AND SHAPE IT TO NEAT LINES AND DIMENSIONS SHOWN ON THE PLANS PLUS A 0.2–FOOT OVERCUT AROUND THE CHANNEL PERIMETER TO ALLOW FOR BULKING DURING SEEDBED PREPARATIONS AND SOD BUILDUP.
3. REMOVE AND PROPERLY DISPOSE OF ALL EXCESS SOIL SO THAT SURFACE WATER MAY ENTER THE CHANNEL FREELY.
4. THE PROCEDURE USED TO ESTABLISH GRASS IN THE CHANNEL WILL DEPEND UPON THE SEVERITY OF THE CONDITIONS AND SELECTION OF SPECIES. PROTECT THE CHANNEL WITH MULCH OR A TEMPORARY LINER SUFFICIENT TO WITHSTAND ANTICIPATED VELOCITIES DURING THE ESTABLISHMENT PERIOD (APPENDIX 8.05).

4/11.1 Grass Lined Channel Detail

Reference: NCDEQ 6.30A

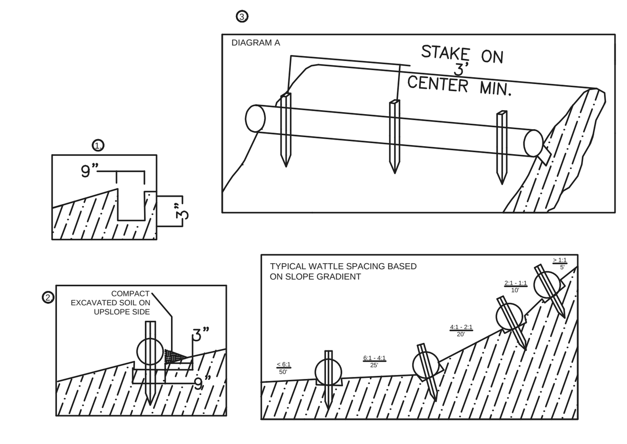

1. Begin at the location where the wattle is to be installed by excavating a 2-3" deep x 9" wide trench along the contour of the slope. Excavated soil should be placed upslope from the anchor trench.
1. Place the wattle in the trench so that it contours to the soil surface. Compact soil from the excavated trench against the wattle on the uphill side. Adjacent wattles should tightly abut.
3. Secure the wattle with 18-24"stakes every 3-4' and with a stake on each end. Stakes should be driven through the middle of the wattle leaving at least 2-3" of stake extending above the wattle. Stakes should be driven perpendicular to the slope face.

- Guidelines may require modification due to soil type, rainfall, and amount of runoff.
- For best results, place structure at the of the slope.
- The straw wattle can be installed downhill from top of slope.
- Final straw wattles shall be installed at or near base of slope. Wattles should be installed perpendicular to the primary direction of overland water flow.
- Straw Wattles are a temporary sediment control device.

2/11.1 Straw Wattle Installation

Level Spreader (not to scale)

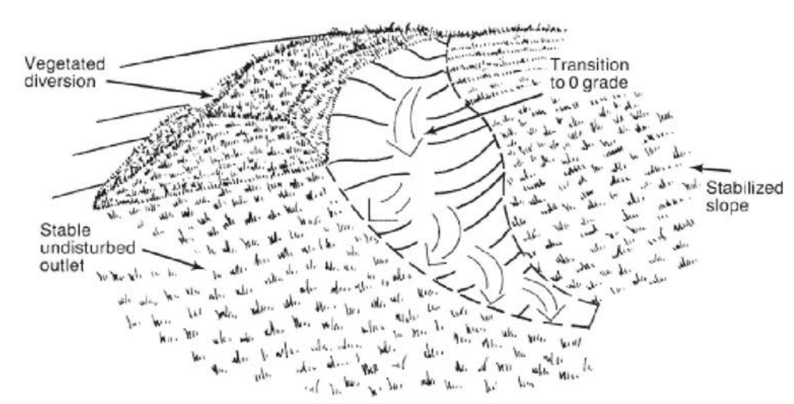

Figure 6.40a Level spreader is designed to disperse small volumes of concentrated flow across stable slopes.

Grade—The grade of the last 20 feet of the diversion channel should provide a smooth transition from channel grade to level at the spreader. The grade of the spreader should be 0%.

Spreader lip—Construct the level lip on undisturbed soil to uniform height and zero grade over the length of the spreader. Protect it with an erosion-resistant material, such as fiberglass matting, to prevent erosion and allow vegetation to become established.

Outlet area—The outlet disposal area must be generally smooth and well-vegetated with a maximum slope of 10%.

Vegetate all disturbed areas.

Construction Specifications

1. The matting should be a minimum of 4 feet wide extending 6 inches over the lip and buried 6 inches deep in a vertical trench on the lower edge. The upper edge should butt against smooth cut sod and be securely held in place with closely spaced heavy duty wire staples at least 12 inches long.

2. Ensure that the spreader lip is level for uniform spreading of storm runoff.

3. Construct the level spreader on undisturbed soil (**not** on fill).

4. Construct a 20-foot transition section from the diversion channel to blend smoothly to the width and depth of the spreader.

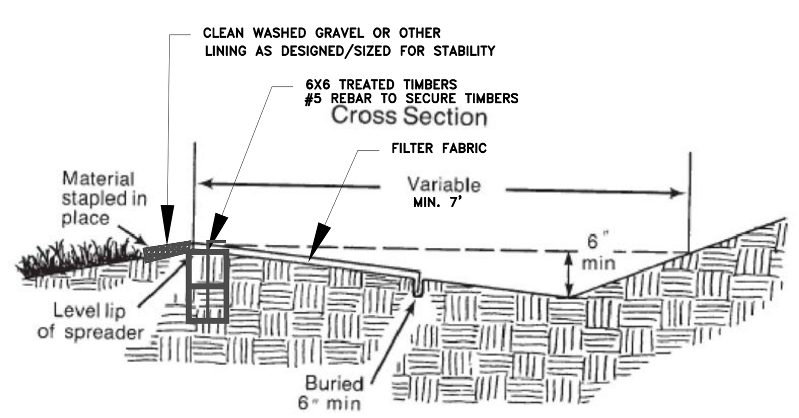

Figure 6.40b Detail of level spreader cross section.

5. Disperse runoff from the spreader across a properly stabilized slope not to exceed 10%. Make sure the slope is sufficiently smooth to keep flow from concentrating.

6. Immediately after its construction, appropriately seed and mulch the entire disturbed area of the spreader.

Maintenance — Inspect level spreaders after every rainfall until vegetation is established, and promptly make needed repairs. After the area has been stabilized, make periodic inspections, and keep vegetation in a healthy, vigorous condition.

References — *Surface Stabilization*
6.10, Temporary Seeding
6.11, Permanent Seeding

Runoff Control Measures
6.20, Temporary Diversions
6.21, Permanent Diversions

7/11.1 Level Spreader Detail

Scale: N.T.S.

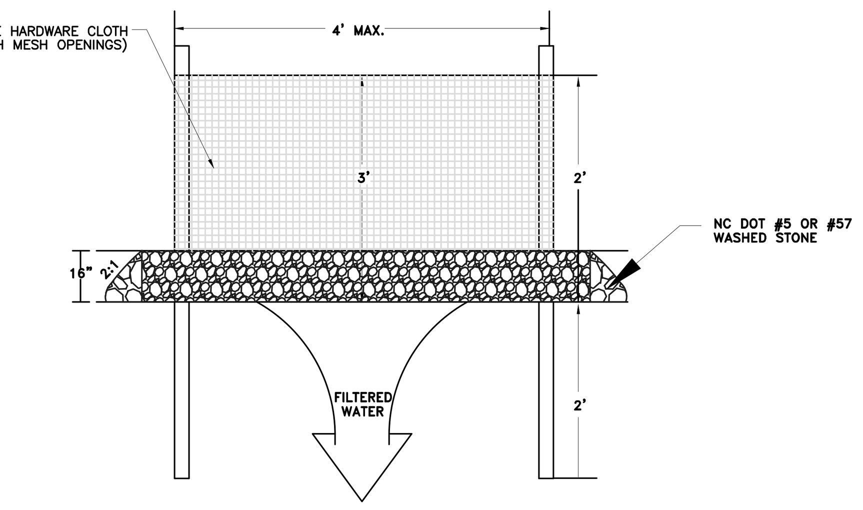

CONSTRUCTION SPECIFICATIONS:

1. UNIFORMLY GRADE A SHALLOW DEPRESSION APPROACHING THE INLET.
2. DRIVE 5–FOOT STEEL POSTS 2 FEET INTO THE GROUND SURROUNDING THE INLET. SPACE POSTS EVENLY AROUND THE PERIMETER OF THE INLET, A MAXIMUM OF 4 FEET APART.
3. SURROUND THE POSTS WITH WIRE MESH HARDWARE CLOTH. SECURE THE WIRE MESH TO THE STEEL POSTS AT THE TOP, MIDDLE AND BOTTOM. PLACING A 2–FOOT FLAP OF THE WIRE MESH UNDER THE GRAVEL FOR ANCHORING IS RECOMMENDED.
4. PLACE CLEAN GRAVEL (NC DOT #5 OR #57 STONE) ON A 2:1 SLOPE WITH A HEIGHT OF 16 INCHES AROUND THE WIRE AND SMOOTH TO AN EVEN GRADE.
5. ONCE THE CONTRIBUTING DRAINAGE AREA HAS BEEN STABILIZED, REMOVE ACCUMULATED SEDIMENT AND ESTABLISH FINAL GRADING ELEVATIONS.
6. COMPACT THE AREA PROPERLY AND STABILIZE IT WITH GROUNDCOVER.

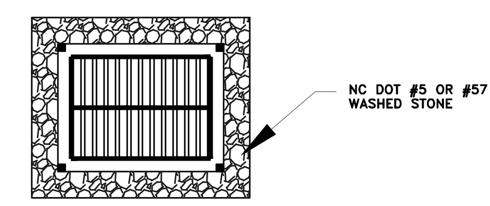

5/11.1 Hardware Cloth & Gravel Inlet Protection Detail

Ref: NCDEQ

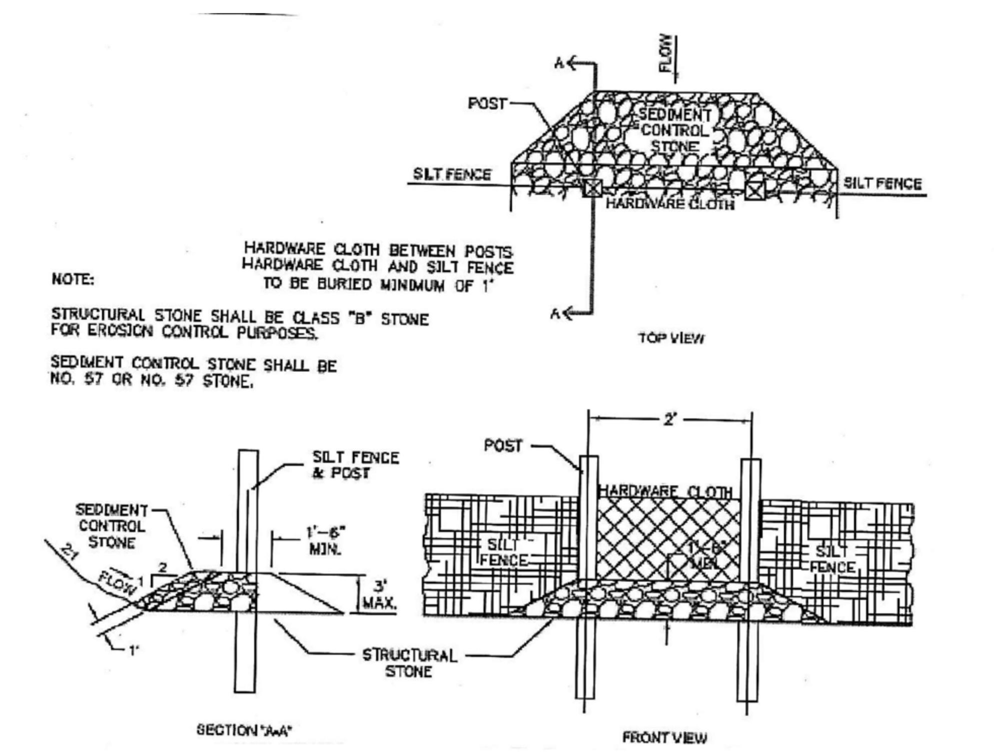

NOTE:

STRUCTURAL STONE SHALL BE CLASS "B" STONE FOR EROSION CONTROL PURPOSES.

SEDIMENT CONTROL STONE SHALL BE NO. 57 OR NO. 57 STONE.

GENERAL NOTES:

1. STONE OUTLETS SHOULD BE PLACED IN THE LOW–LYING AREAS OF SILT FENCING, BASED ON FIELD CONDITIONS.

2. MAINTENANCE – FRESHEN STONE WHEN SEDIMENT ACCUMULATION IS 6 INCHES OR AS NEEDED.

8/11.1 Stone Outlet Detail

Ref: NCDEQ

SEEDBED REQUIREMENTS:
ESTABLISHMENT OF VEGETATION SHOULD NOT BE ATTEMPTED ON SITES THAT ARE UNSUITABLE DUE TO INAPPROPRIATE SOIL TEXTURE (TABLE 6.10A), POOR DRAINAGE, CONCENTRATED OVERLAND FLOW, OR STEEPNESS OF SLOPE UNTIL MEASURES HAVE BEEN TAKEN TO CORRECT THESE PROBLEMS.

TO MAINTAIN A GOOD STAND OF VEGETATION, THE SOIL MUST MEET CERTAIN MINIMUM REQUIREMENTS AS A GROWTH MEDIUM. THE EXISTING SOIL SHOULD HAVE THESE CRITERIA:
- ENOUGH FINE–GRAINED (SILT AND CLAY) MATERIAL TO MAINTAIN ADEQUATE MOISTURE AND NUTRIENT SUPPLY (AVAILABLE WATER CAPACITY OF AT LEAST 0.05 INCHES WATER TO 1.00 INCH OF SOIL).
- SUFFICIENT PORE SPACE TO PERMIT ROOT PENETRATION.
- SUFFICIENT DEPTH OF SOIL TO PROVIDE AN ADEQUATE ROOT ZONE. THE DEPTH TO ROCK OR IMPERMEABLE LAYERS SUCH AS HARDPANS SHOULD BE 12 INCHES OR MORE, EXCEPT ON SLOPES STEEPER THAT 2:1 WHERE THE ADDITION OF SOIL IS NOT FEASIBLE.
- A FAVORABLE pH RANGE FOR PLANT GROWTH, USUALLY 6.0 – 8.5.
- FREE FROM LARGE ROOTS, BRANCHES, STONES , LARGE CLODS OF EARTH, OR TRASH OF ANY KIND. CLODS AND STONES MAY BE LEFT ON SLOPES STEEPER THAN 3:1 IF THEY ARE HYDROSEEDED.

IF ANY OF THE ABOVE CRITERIA ARE NOT MET – I.E. IF EXISTING SOIL IS TOO COARSE, DENSE, SHALLOW, OR ACIDIC TO FOSTER VEGETATION – SPECIAL AMENDMENTS ARE REQUIRED. THE SOIL CONDITIONERS DESCRIBED BELOW MAY BE BENEFICIAL OR, PERFERABLY, TOPSOIL MAY BE APPLIED.

SEEDBED PREPARATION:
FILL SLOPES (PERMANENT SEEDING) – FOR FILL SLOPES 3:1 OR STEEPER:
1. LEAVE THE LAST 4–6 INCHES OF FILL LOOSE AND UNCOMPACTED, ALLOWING ROCKS, ROOTS, LARGE CLODS AND OTHER DEBRIS TO REMAIN ON THE SLOPE.
2. ROUGHEN SLOPE FACES BY MAKING GROOVES 2–3 INCHES DEEP, PERPINDICULAR TO THE SLOPE.
3. SPREAD LIME EVENLY OVER SLOPES AT RATES RECOMMENDED BY SOIL TESTS.

FILL SLOPES (TEMPORARY SEEDING) – FOR FILL SLOPES 3:1 OR STEEPER: 1. LEAVE A LOOSE, UNCOMPACTED SURFACE. REMOVE LARGE CLODS, ROCKS, AND DEBRIS WHICH MIGHT HOLD NETTING ABOVE THE SURFACE.
2. SPREAD LIME AND FERTILIZER EVENLY AT RATES RECOMMENDED BY SOIL TESTS.
3. INCORPORATE AMENDMENTS BY ROUGHENING OR GROOVING SOIL SURFACE ON THE CONTOUR.

FOR HIGH–MAINTENANCE TURF:
1. REMOVE ROCKS AND DEBRIS THAT COULD INTERFERE WITH TILLAGE AND THE PRODUCTION OF A UNIFORM SEEDBED.
2. APPLY LIME AND FERTILIZER AT RATES RECOMMENDED BY SOIL TESTS; SPREAD EVENLY AND INCORPORATE TO A DEPTH OF 2–4" WITH A FARM DISK OR CHISEL PLOW.
3. LOOSEN THE SUBGRADE IMMEDIATELY PRIOR TO SPREADING TOPSOIL BY DISKING OR SCARIFYING TO A DEPTH OF AT LEAST 2 INCHES.
4. SPREAD TOPSOIL TO A DEPTH OF 2–4 INCHES AND CULTIPACK.
5. DISK OR HARROW AND RAKE TO PRODUCE A UNIFORM AND WELL–PULVERIZED SURFACE.
6. LOOSEN SURFACE JUST PRIOR TO APPLYING SEED.

FOR GENTLE OR FLAT SLOPES WHERE TOPSOIL IS NOT USED:
1. REMOVE ROCKS AND DEBRIS.
2. APPLY LIME AND FERTILIZER AT RATES RECOMMENDED BY SOIL TESTS; SPREAD EVENLY AND INCORPORATE INTO THE TOP 6" WITH DISK, CHISEL PLOW, OR ROTARY TILLER.
3. BREAK UP LARGE CLODS AND RAKE INTO A LOOSE, UNIFORM SEEDBED.
4. RAKE TO LOOSEN SURFACE JUST PRIOR TO APPLYING SEED.

NOTE:
LIME AND FERTILIZER NEEDS SHOULD BE DETERMINED BY SOIL TESTS. SOIL TESTING IS PERFORMED FREE OF CHARGE BY THE NORTH CAROLINA DEPARTMENT OF AGRICULTURE (NCDA) SOIL TESTING LABORATORY. DIRECTIONS, SAMPLE CARTONS, AND INFORMATION SHEETS ARE AVAILABLE THROUGH COUNTY AGRICULTURAL EXTENSION OFFICES OR FROM NCDA. ALLOW 1–6 WEEKS FOR SAMPLE TURN–AROUND SO PLAN WELL IN ADVANCE OF FINAL GRADING.

WHEN SOIL TEST ARE NOT AVAILABLE, FOLLOW RATES SUGGESTED ON THE INDIVIDUAL SPECIFICATION SHEET FOR THE SEEDING MIX CHOSEN (TABLES 6.11C THROUGH 6.11V). APPLICATION RATES USUALLY FALL INTO THE FOLLOWING RANGES:
- GROUND AGRICULTURAL LIMESTONE:
  LIGHT–TEXTURED, SANDY SOILS: 1 TO 1–1/2 TONS/ACRE
  HEAVY–TEXTURED, CLAYEY SOILS: 2–3 TONS/ACRE
- FERTILIZER:
  GRASSES: 800–1,200 LB/ACRE OF 10–10–10 (OR THE EQUIVALENT)
  GRASS–LEGUME MIXTURES: 800–1,200 LB/ACRE OF 5–10–10 (OR THE EQUIVALENT)

FOR GRASS–LINED CHANNELS

Seeding Mixture	Rate (lb/acre)
Tall Fescue	200 (4–5 lb/1,000 sq. ft.)

Nurse Plants:
Between May 1 and Aug. 15 add 15 lb/acre Sudangrass or 10 lb/acre German Millet. Before May 1, or After Aug. 15, add 40 lb/acre rye (grain).

Seeding Dates:
Best: Aug. 25 – Oct.
Possible: Feb. – Aug.

Avoid seeding from Nov. to Jan. If seeding must be done at this time, add 40 lb/acre rye grain and use a channel lining that offers maximum protection.

Soil Amendments:
Apply lime and fertilizer according to soil tests, or apply 4,000 lb/acre ground agricultural limestone and 1,000 lb/acre 10–10–10 fertilizer. Operate tillage equipment across the waterway.

Mulch:
Use jute, erosion control matting, or other effective channel lining material to cover the bottom of the channels and ditches, and staple securely. The lining should extend above the highest calculated depth of flow. On channel side slopes above this height, and in drainages not requiring temporary linings, apply 4,000 lb/acre grain straw and anchor straw by stapling netting over the top.

Mulch and anchoring material must not be allowed to wash down slopes where they can clog drainage devices.

Maintenance:
Inspect and repair mulch frequently. Refertilize in late winter of the following year; use soil tests or apply 150 lb/acre 10–10–10. Mow regularly to a height of 2–4 inches.

REFERENCE: NORTH CAROLINA EROSION AND SEDIMENT CONTROL MANUAL.

FOR SLOPES 3:1 OR STEEPER

Seeding Mixture	Rate (lb/acre)
Tall Fescue	200 (4–5 lb/1,000 sq. ft.)
Sericea Lespedeza	30 (0.7–0.8 lb/1,000 sq. ft.)
Kobe Lespedeza	10 (0.2–0.3 lb/1,000 sq. ft.)

Seeding Notes:
1. In Eastern Piedmont add 25lb/acre Pensacola Bahiagrass or 10 lb/acre common Bermudagrass. Use common Bermudagrass only where it is unlikely to become a pest.
2. After Aug. 15 use unscarified sercia seed.
3. Where a neat appearance is desired, omit sercia and substitute 40 lb/acre Bahiagrass or 15 lb/acre hulled Bermudagrass.
4. To extend spring seeding dates into June, add 15 lb/acre hulled Bermudagrass. However, it is perferable to seed temporary cover and seed Fescue in September.

Nurse Plants:
Between May 1 and Aug. 15 add 15 lb/acre Sudangrass or 10 lb/acre German Millet. Before May 1, or After Aug. 15, add 40 lb/acre rye (grain).

Seeding Dates:
Best: Fall (Aug. 25 – Sep. 15), Late Winter (Feb. 15 – Mar. 21)
Possible: Fall (Aug. 20 – Oct. 25), Late Winter (Feb. 1 – Apr. 15)

Fall is best for Tall Fescue and late winter for lespedezas. Overseeding of Kobe Lespedeza over fall–seeded Tall Fescue is very effective. Use unhulled Bermudagrass seed in fall.

Soil Amendments:
Apply lime and fertilizer according to soil tests, or apply 4,000 lb/acre ground agricultural limestone and 1,000 lb/acre 10–10–10 fertilizer.

Mulch:
Apply 4,000–5,000 lb/acre grain straw or equivalent cover or another suitable mulching material. Anchor mulch by tacking with asphalt, roving, or netting. Netting is the pre–ferred anchoring method on steep slopes.

Maintenance:
Inspect and repair mulch frequently. Refertilize in the second year unless growth is fully adequate. Mow regularly to a height of 2–4 inches in necessary areas. Other areas may be mowed once or twice a year, but is not necessary.

REFERENCE: NORTH CAROLINA EROSION AND SEDIMENT CONTROL MANUAL.

SEEDING:
FOR PERMANENT SEEDING FILL SLOPES STEEEPER THAN 3:1, USE HYDRAULIC SEEDING EQUIPMENT TO APPLY SEED AND FERTILIZER, A WOOD MULCH FIBER AT 45 LB/1,000 SQ. FT., AND MULCH TACTIFER.

FOR GENTLE TO FLAT SLOPES OR TEMPORARY SEEDING, BROADCAST SEED AT THE RECOMMENDED RATE WITH A CYCLONE SEEDER, DROP SPREADER, OR CULTIPACK SEEDER. RAKE SEED INTO THE SOIL AND LIGHTLY PACK TO ESTABLISH GOOD CONTACT.

USE CERTIFIED SEED FOR PERMANENT SEEDING WHENEVER POSSIBLE. CERTIFIED SEED IS INSPECTED BY THE NORTH CAROLINA CROP IMPROVEMENT ASSOCIATION. IT MEETS PUBLISHED NORTH CAROLINA STANDARDS AND SHOULD BEAR AN OFFICIAL "CERTIFIED SEED" LABEL.

LABELING OF NON–CERTIFIED SEED IS ALSO REQUIRED BY LAY. LABELS CONTAIN IMPORTANT INFORMATION ON SEED PURITY, GERMINATION, AND PRESENCE OF WOOD SEEDS. SEEDS MUST MEET STATE STANDARDS FOR CONTENT AND NOXIOUS WEEDS. DO NOT ACCEPT SEED CONTAINING "PROHIBITED" NOXIOUS WEED SEED.

MULCH ALL PLANTINGS IMMEDIATELY AFTER SEEDING.

MULCHING:
FOR PERMANENT SEEDING FILL SLOPES 3:1 OR GREATER:
- IN MID–SUMMER, LATE FALL, OR WINTER, APPLY 100 LB/1000 SQ. FT. GRAIN STRAW, COVER WITH NETTING AND STAPLE TO THE SLOPE. IN SPRING OR EARLY FALL USE 45 LB/1000 SQ. FT. WOOD FIBER IN A HYDROSEEDER SLURRY.

FOR HIGH–MAINTENANCE VEGETATION AND TEMPORARY SEEDING:
- APPLY 90 LB/1000 SQ. FT. (4,000 LB/ACRE) GRAIN STRAW AND TACK WITH 0.1 GAL/SQ. YD. ASPHALT (11 GAL/1000 SQ. FT.)

FOR GRASS–LINED CHANNELS:
- INSTALL RECOMMENDED EROSION CONTROL MAT IN THE CHANNEL, EXTEND UP THE CHANNEL BANKS TO THE HIGHEST CALCULATED DEPTH OF FLOW (SEE GRASS–LINED CHANNEL DETAIL), AND SECURE AND ANCHOR.

MAINTENANCE:
GENERALLY, A STAND OF VEGETATION CANNOT BE DETERMINED TO BE FULLY ESTABLISHED UNTIL SOIL COVER HAS BEEN MAINTAINED FOR ONE FULL YEAR FROM PLANTING, INSPECT SEEDED AREAS FOR FAILURE AND MAKE NECESSARY REPAIRS AND RESEEDINGS WITHIN THE SAME SEASON, IF POSSIBLE.

RESEEDING – IF A STAND HAS INADEQUATE COVER, RE–EVALUATE CHOICE OF PLANT MATERIALS AND QUANTITIES OF LIME AND FERTILIZER. RE–ESTABLISH THE STAND AFTER SEEDBED PREPARATION OR OVERSEED THE STAND. CONSIDER SEEDING TEMPORARY, ANNUAL SPECIES IF THE TIME OF YEAR IS NOT APPROPRIATE FOR PERMANENT SEEDING.

IF VEGETATION FAILS TO GROW, SOIL MUST BE TESTED TO DETERMINE IF ACIDITY OR NUTRIENT IMBALANCE IS RESPONSIBLE.

FERTILIZATION – ON THE TYPICAL DISTURBED SITE, FULL ESTABLISHMENT USUALLY REQUIRES REFERTILIZATION IN THE SECOND GROWING SEASON. FINE TURF REQUIRES ANNUAL MAINTENANCE FERTILIZATION. USE SOIL TESTS IF POSSIBLE OR FOLLOW THE GUIDELINES GIVEN FOR THE SPECIFIC SEEDING MIXTURE.

FOR GENTLE SLOPES

Seeding Mixture	Rate (lb/acre)
Tall Fescue	325 (4–5 lb/1,000 sq. ft.)

Nurse Plants:
Between May 1 and Aug. 15 add 35 lb/acre German Millet.
Before May 1, or After Aug. 15, add 40 lb/acre Rye (Grain).

Seeding Dates:
Best: Aug. 25 – Oct.
Possible: Feb. – Aug.

Avoid seeding from Nov. to Jan. If seeding must be done at this time, add 40 lb/acre rye grain.

Soil Amendments:
Apply lime and fertilizer according to soil tests, or apply 4,000 lb/acre ground agricultural limestone and 1,000 lb/acre 10–10–10 fertilizer.

Mulch:
Apply 4,000–5,000 lb/acre grain straw or equivalent cover or another suitable mulching material.

Maintenance:
Inspect and repair mulch frequently. Topdress with 10–10–10 fertilizer if growth is not fully adequate. Mow regularly to a height of 2–4 inches.

REFERENCE: NORTH CAROLINA EROSION AND SEDIMENT CONTROL MANUAL.

6/11.1 Seeding Specifications

Ref: NCDEQ

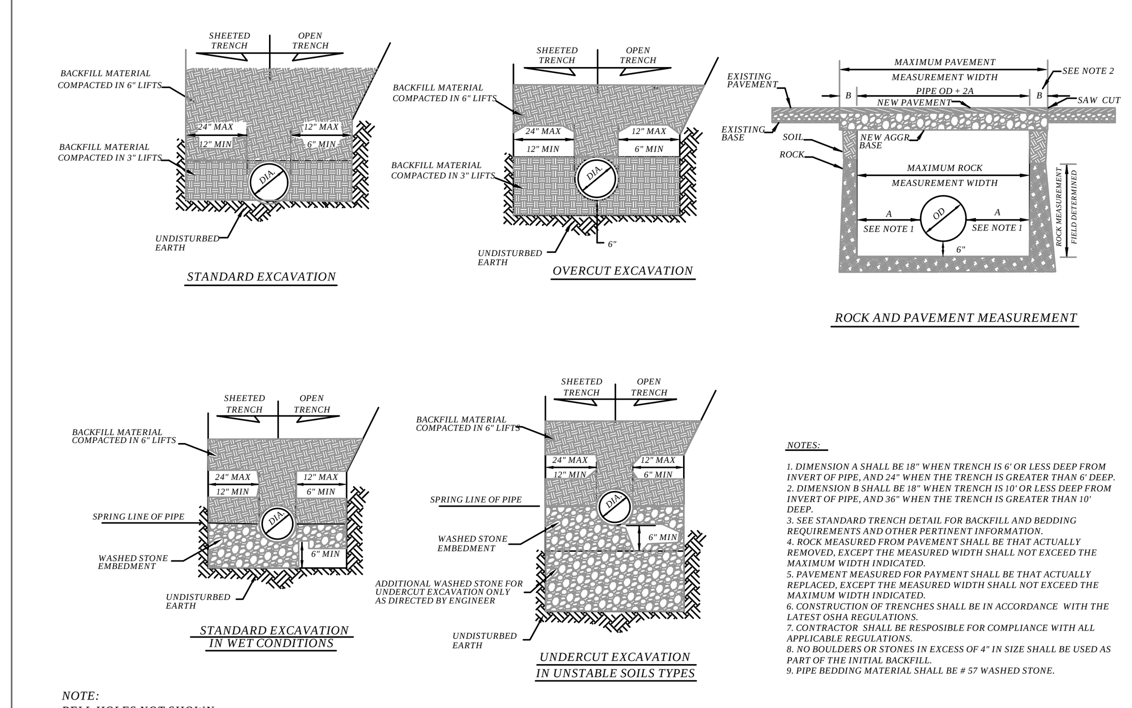

NOTE:
BELL HOLES NOT SHOWN

9/11.1 Trench Excavation Detail

Amicus Partners, PLLC

Firm License # P–1191
331 Coddle Market Drive
Suite 110
Concord, NC 28027

Civil Site Design
Low Impact Development
Small–Scale Building Design

Telephone: 704.573.1621
Facsimile: 704.248.7951

Seals:

NORTH CAROLINA PROFESSIONAL ENGINEER SEAL 032006 NICHOLAS R. PARKER

05–13–2016

ROB WALLACE PARK
CABARRUS COUNTY, NORTH CAROLINA

FOR
MR. KYLE BILAFER
INFRASTRUCTURE AND ASSET MANAGEMENT
CABARRUS COUNTY GOVERNMENTAL CENTER
PO BOX 707
CONCORD, NC 28026

Project Number:	17–16–010
Date:	⚠ 05–13–2016
Drawn By:	CMM
Checked By:	NRP

Revisions:

	04/20/16	Original Submittal
⚠	05/13/16	Per Developer

Sheet Title:

EROSION / DRAINAGE DETAILS

Sheet No:

C-11.1

I - GENERAL

1.0 STANDARDS AND DEFINITIONS

1.1 STANDARDS - ALL STANDARDS REFER TO LATEST EDITION UNLESS OTHERWISE NOTED.

1.1.1 ASTM B-864 "STANDARD SPECIFICATION FOR CORRUGATED ALUMINUM BOX CULVERTS" (AASHTO DESIGNATION M-219).

1.1.2 AASHTO STANDARD SPECIFICATION FOR HIGHWAY BRIDGES - SECTION 12 DIVISION I - DESIGN.

1.1.3 AASHTO STANDARD SPECIFICATION FOR HIGHWAY BRIDGES - SECTION 26 DIVISION II - CONSTRUCTION.

1.2 DEFINITIONS

1.2.1 OWNER - IN THESE SPECIFICATIONS THE WORD "OWNER" SHALL MEAN ----.

1.2.2 ENGINEER - IN THESE SPECIFICATIONS THE WORD "ENGINEER" SHALL MEAN THE ENGINEER OF RECORD OR OWNER'S DESIGNATED ENGINEERING REPRESENTATIVE.

1.2.3 MANUFACTURER - IN THESE SPECIFICATIONS THE WORD "MANUFACTURER" SHALL MEAN CONTECH ENGINEERED SOLUTIONS, LLC 800-338-1122
Tom Lawson

1.2.4 CONTRACTOR - IN THESE SPECIFICATIONS THE WORD "CONTRACTOR" SHALL MEAN THE FIRM OR CORPORATION UNDERTAKING THE EXECUTION OF ANY INSTALLATION WORK UNDER THE TERMS OF THESE SPECIFICATIONS.

1.2.5 APPROVED - IN THESE SPECIFICATIONS THE WORD "APPROVED" SHALL REFER TO THE APPROVAL OF THE ENGINEER OR HIS DESIGNATED REPRESENTATIVE.

1.2.6 AS DIRECTED - IN THESE SPECIFICATIONS THE WORDS "AS DIRECTED" SHALL REFER TO THE DIRECTIONS TO THE CONTRACTOR FROM THE OWNER OR HIS DESIGNATED REPRESENTATIVE.

2.0 GENERAL CONDITIONS

2.1 THE CONTRACTOR SHALL FURNISH ALL LABOR, MATERIAL AND EQUIPMENT AND PERFORM ALL WORK AND SERVICES EXCEPT THOSE SET OUT AND FURNISHED BY THE OWNER, NECESSARY TO COMPLETE IN A SATISFACTORY MANNER THE SITE PREPARATION, EXCAVATION, FILLING, COMPACTION, GRADING AS SHOWN ON THE PLANS AND AS DESCRIBED THEREIN. THIS WORK SHALL CONSIST OF ALL MOBILIZATION CLEARING AND GRADING, GRUBBING, STRIPPING, REMOVAL OF EXISTING MATERIAL UNLESS OTHERWISE STATED, PREPARATION OF THE LAND TO BE FILLED, FILLING OF THE LAND, SPREADING AND COMPACTION OF THE FILL, AND ALL SUBSIDIARY WORK NECESSARY TO COMPLETE THE GRADING OF THE CUT AND FILL AREAS TO CONFORM WITH THE LINES, GRADES, SLOPES, AND SPECIFICATIONS. THIS WORK IS TO BE ACCOMPLISHED UNDER THE OBSERVATION OF THE OWNER OR HIS DESIGNATED REPRESENTATIVE.

2.2 PRIOR TO BIDDING THE WORK, THE CONTRACTOR SHALL EXAMINE, INVESTIGATE AND INSPECT THE CONSTRUCTION SITE AS TO THE NATURE AND LOCATION OF THE WORK, AND THE GENERAL AND LOCAL CONDITIONS AT THE CONSTRUCTION SITE, INCLUDING WITHOUT LIMITATION, THE CHARACTER OF SURFACE OR SUBSURFACE CONDITIONS AND OBSTACLES TO BE ENCOUNTERED ON AND AROUND THE CONSTRUCTION SITE AND SHALL MAKE SUCH ADDITIONAL INVESTIGATION AS HE MAY DEEM NECESSARY FOR THE PLANNING AND PROPER EXECUTION OF THE WORK.

IF CONDITIONS OTHER THAN THOSE INDICATED ARE DISCOVERED BY THE CONTRACTOR, THE OWNER SHALL BE NOTIFIED IMMEDIATELY. THE MATERIAL WHICH THE CONTRACTOR BELIEVES TO BE A CHANGED CONDITION SHALL NOT BE DISTURBED SO THAT THE OWNER CAN INVESTIGATE THE CONDITION.

2.3 THE CONSTRUCTION SHALL BE PERFORMED UNDER THE DIRECTION OF THE ENGINEER.

2.4 ALL ASPECTS OF THE STRUCTURE DESIGN AND SITE LAYOUT INCLUDING FOUNDATIONS, BACKFILL, END TREATMENTS AND NECESSARY SCOUR CONSIDERATION SHALL BE PERFORMED BY THE ENGINEER.

ANY INSTALLATION GUIDANCE PROVIDED HEREIN SHALL BE ENDORSED BY THE ENGINEER OR SUPERSEDED BY THE ENGINEER'S PLANS AND SPECIFICATIONS.

Project Line 1
Project Line 2
Project Line 3
Project Line 4

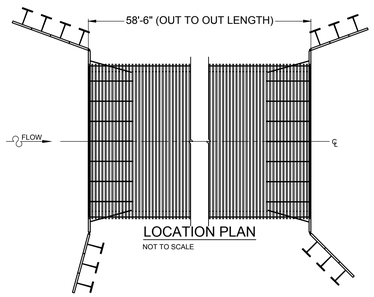

LOCATION PLAN
NOT TO SCALE

PRELIMINARY
NOT FOR CONSTRUCTION

MARK	DATE	REVISION DESCRIPTION	BY

CONTECH ENGINEERED SOLUTIONS LLC
www.ContechES.com
9025 Centre Pointe Dr., Suite 400, West Chester, OH 45069
800-338-1122 513-645-7000 513-645-7993 FAX

CONTECH STRUCTURAL PLATE
PROPOSAL DRAWING

ROB WALLACE PARK
MIDLAND, NC

PROJECT No.	SEQ. No.	DATE
541142	010	4/21/2016
DESIGNED: TNL	DRAWN: TNL	
CHECKED:	APPROVED:	
SHEET NO.: CT1 OF 1		

II - ALUMINUM BOX CULVERT

1.0 GENERAL

1.1 Manufacturer shall fabricate the aluminum box culvert as shown on the plans. Fabrication shall conform to the requirements of ASTM B-864 and shall consist of plates, ribs, and appurtenant items.

Plate thickness, rib spacing, end treatment and type of invert and foundation shall be as indicated on the plans. All manufacturing processes including corrugating, punching, curving and required galvanizing shall be performed within the United States of America.

1.2 The contractor shall verify all field dimensions and conditions prior to ordering materials.

2.0 DIMENSIONS

2.1 The proposed structure shall be an ALUMINUM BOX CULVERT with the following dimensions:

Designation: ALBC 131-L2
Span: 33'-9"
Rise: 9'-1"
Min. Cover: 2.0'
Max. Cover: 5
Loading: HL-93

2.2 All plan dimensions on the contract drawings are measured in a true horizontal plan unless otherwise noted.

3.0 ASSEMBLY AND INSTALLATION

3.1 Bolts and nuts shall conform to the requirements of ASTM A-307 or ASTM A-449. The box culvert shall be assembled in accordance with the plate layout drawings provided by the manufacturer and per the manufacturer's recommendations.

Bolts shall be tightened using an applied torque of between 100 and 150 ft.-lbs.

3.2 The box culvert shall be installed in accordance with the plans and specifications, the manufacturer's recommendations, and AASHTO Standard Specification for Highway Bridges - Section 26 Division II - Construction.

3.3 Trench excavation shall be made in embankment material that is structurally adequate. The trench width shall be shown on the plans. Poor quality in situ embankment material must be removed and replaced with suitable backfill as directed by the Engineer.

3.4 Bedding preparation is critical to both structure performance and service life. The bed should be constructed to uniform line and grade to avoid distortions that may create undesirable stresses in the structure and/or rapid deterioration of the roadway. The bed should be free of rock formations, protruding stones, frozen lumps, roots, and other foreign matter that may cause unequal settlement.

3.5 Bedding shall provide a minimum of 4,000 psf bearing capacity. Foundation details for bearing capacity less than 4,000 psf shall be approved by the Engineer.

3.6 The structure shall be assembled in accordance with the Manufacturer's instructions. All plates shall be unloading and handled with reasonable care. Plates shall not be rolled or dragged over gravel rock and shall be prevented from striking rock or other hard objects during placement in trench or on bedding.

When installed on a full invert or on flexible footing pads, assembly of the invert or footing pads shall start at the downstream end. Circumferential seam laps shall shingle over the top of the downstream plates as assembly progresses upstream. Whether the box culvert is installed on a concrete footing, full metal invert, or flexible footing pad, assembly of the structure shell shall start at the upstream end. Downstream rings of plates shall be assembled outside of the upstream rings. (Circumferential seams are shingled downstream when viewed from the inside of the shell).

3.7 The structure shall be backfilled using clean well graded granular material that meets the requirements for soil classifications A-1. See the information at the right of this sheet.

Backfill must be placed symmetrically on each side of the structure in 6 to 8 inch loose lifts. Each lift shall be compacted to a minimum of 90 percent density per AASHTO T-180

3.8 Construction loads that exceed highway load limits are not allowed to cross the structure without approval from the Engineer.

Normal highway traffic is not allowed to cross the structure until the structure has been backfilled and paved. If the road is unpaved, cover allowance to accommodate rutting shall be as directed by the Engineer.

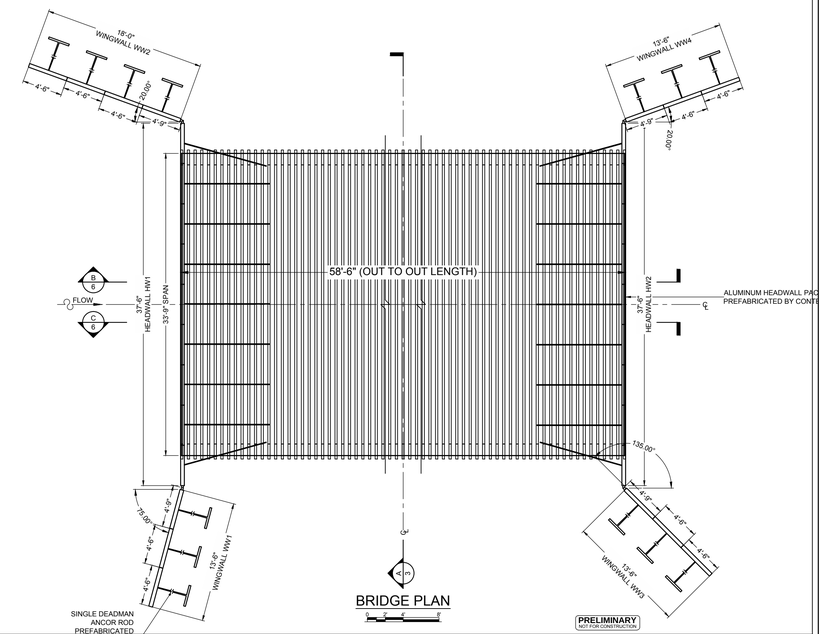

BRIDGE PLAN

PRELIMINARY
NOT FOR CONSTRUCTION

MARK	DATE	REVISION DESCRIPTION	BY

CONTECH ENGINEERED SOLUTIONS LLC
www.ContechES.com
9025 Centre Pointe Dr., Suite 400, West Chester, OH 45069
800-338-1122 513-645-7000 513-645-7993 FAX

CONTECH STRUCTURAL PLATE
PROPOSAL DRAWING

ROB WALLACE PARK
MIDLAND, NC

PROJECT No.	SEQ. No.	DATE
541142	010	4/21/2016
DESIGNED: TNL	DRAWN: TNL	
CHECKED:	APPROVED:	
SHEET NO.: CT2 OF 1		

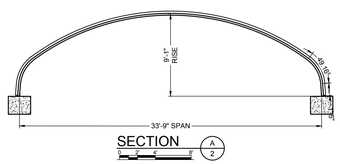

SECTION A/2

PRELIMINARY
NOT FOR CONSTRUCTION

MARK	DATE	REVISION DESCRIPTION	BY

CONTECH ENGINEERED SOLUTIONS LLC
www.ContechES.com
9025 Centre Pointe Dr., Suite 400, West Chester, OH 45069
800-338-1122 513-645-7000 513-645-7993 FAX

CONTECH STRUCTURAL PLATE
PROPOSAL DRAWING

ROB WALLACE PARK
MIDLAND, NC

PROJECT No.	SEQ. No.	DATE
541142	010	4/21/2016
DESIGNED: TNL	DRAWN: TNL	
CHECKED:	APPROVED:	
SHEET NO.: CT3 OF 1		

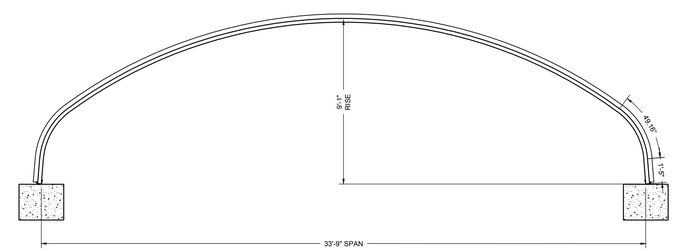

SECTION A/2

PRELIMINARY
NOT FOR CONSTRUCTION

MARK	DATE	REVISION DESCRIPTION	BY

CONTECH ENGINEERED SOLUTIONS LLC
www.ContechES.com
9025 Centre Pointe Dr., Suite 400, West Chester, OH 45069
800-338-1122 513-645-7000 513-645-7993 FAX

CONTECH STRUCTURAL PLATE
PROPOSAL DRAWING

ROB WALLACE PARK
MIDLAND, NC

PROJECT No.	SEQ. No.	DATE
541142	010	4/21/2016
DESIGNED: TNL	DRAWN: TNL	
CHECKED:	APPROVED:	
SHEET NO.: CT3b OF 1		

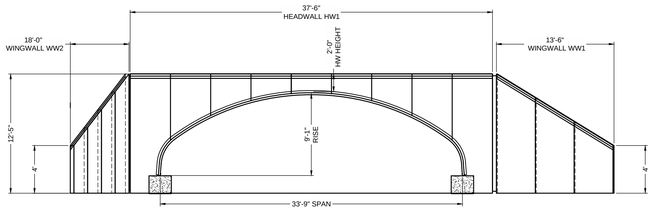

UPSTREAM END ELEVATION

PRELIMINARY
NOT FOR CONSTRUCTION

MARK	DATE	REVISION DESCRIPTION	BY

CONTECH ENGINEERED SOLUTIONS LLC
www.ContechES.com
9025 Centre Pointe Dr., Suite 400, West Chester, OH 45069
800-338-1122 513-645-7000 513-645-7993 FAX

CONTECH STRUCTURAL PLATE

PROPOSAL
DRAWING

ROB WALLACE PARK

MIDLAND, NC

PROJECT No.:	SEQ. No.:	DATE:
541142	010	4/21/2016
DESIGNED: TNL	DRAWN: TNL	
CHECKED:	APPROVED:	
SHEET NO.: CT4 OF 1		

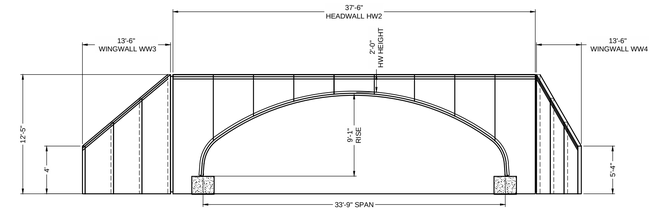

DOWNSTREAM END ELEVATION

PRELIMINARY
NOT FOR CONSTRUCTION

MARK	DATE	REVISION DESCRIPTION	BY

CONTECH ENGINEERED SOLUTIONS LLC
www.ContechES.com
9025 Centre Pointe Dr., Suite 400, West Chester, OH 45069
800-338-1122 513-645-7000 513-645-7993 FAX

CONTECH STRUCTURAL PLATE

PROPOSAL
DRAWING

ROB WALLACE PARK

MIDLAND, NC

PROJECT No.:	SEQ. No.:	DATE:
541142	010	4/21/2016
DESIGNED: TNL	DRAWN: TNL	
CHECKED:	APPROVED:	
SHEET NO.: CT5 OF 1		

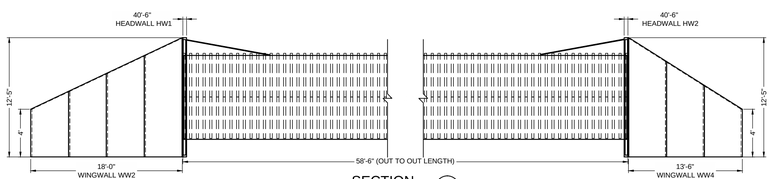

SECTION B/2

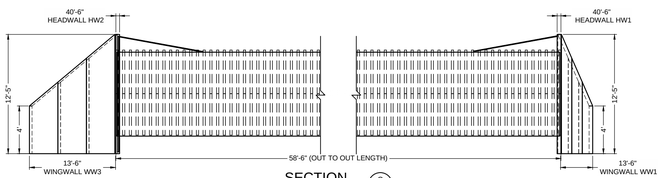

SECTION C/2

PRELIMINARY
NOT FOR CONSTRUCTION

MARK	DATE	REVISION DESCRIPTION	BY

CONTECH ENGINEERED SOLUTIONS LLC
www.ContechES.com
9025 Centre Pointe Dr., Suite 400, West Chester, OH 45069
800-338-1122 513-645-7000 513-645-7993 FAX

CONTECH STRUCTURAL PLATE

PROPOSAL
DRAWING

ROB WALLACE PARK

MIDLAND, NC

PROJECT No.:	SEQ. No.:	DATE:
541142	010	4/21/2016
DESIGNED: TNL	DRAWN: TNL	
CHECKED:	APPROVED:	
SHEET NO.: CT6 OF 1		

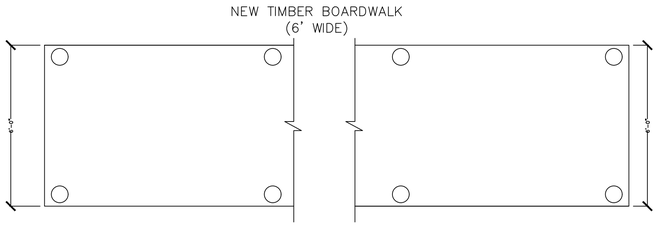

1 / S-1.0 LAYOUT PLAN – 6' WIDE TIMBER BOARDWALK
SCALE: 1/2"=1'-0"

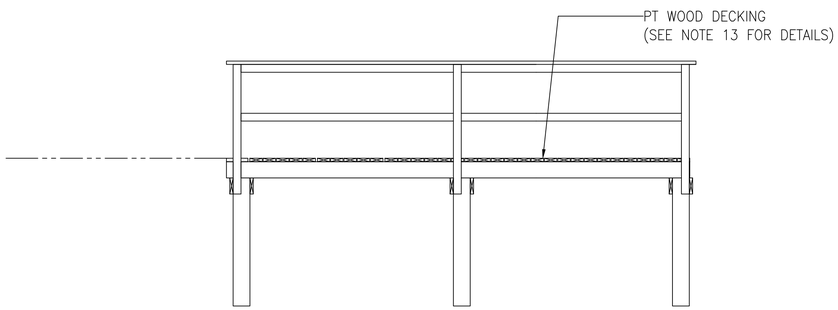

2 / S-1.0 SECTION PLAN (TYP.)
SCALE: 1/2"=1'-0"

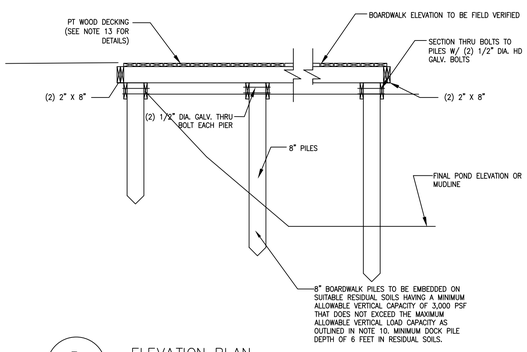

3 / S-1.0 ELEVATION PLAN
SCALE: 1/2"=1'-0"

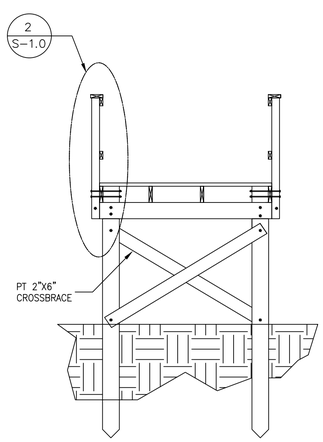

4 / S-1.0 SECTION THROUGH BOARDWALK
SCALE: 1/2"=1'-0"

NOTES:

1. WOOD SHALL BE SMOOTH AND FREE OF EXCESSIVE SPLINTERS, CHECK, AND SPLITS. EXCESSIVELY ROUGH, SPLIT OR UNCHECKED MEMBERS SHALL BE REJECTED.
2. ALL TIMBER AND LUMBER REQUIRED TO BE TREATED A PRESERVATIVE TREATMENT IN ACCORDANCE WITH AWPA STANDARD U1, UC4A. PRESERVATIVES MAY BE OIL-TYPE OR WATER BORNE. CHROMATED COPPER ARSENATE (CCA) SHALL NOT BE USED. WOOD TO BE DRIED AFTER TREATMENT.

3. ALL PILES AND VERTICAL TIMBERS SHALL BE PRESSURE TREATED IN ACCORDANCE WITH AWPA C3 / C18 AND TO 0.6 PCF RETENTION.
4. ALL EXPOSED FRAMING LUMBER TO BE SOUTHERN YELLOW PINE GRADE NO. 2 OR BETTER.
5. ALL METAL CONNECTORS SHALL BE HOT TRIPPLE - DIPPED GALVANIZED OR ZINC PLATED.
6. WASHERS SHALL BE USED WITH EVERY CONNECTION BOLT WHICH COMES IN CONTACT WITH WOOD. PILOT HOLES SHALL NOT EXCEED THE DIAMETER OF THE BOLT MORE THAN 1/16".
7. BOLTS SHALL BE TIGHTENED TO THE POINT THE WASHER BEGINS TO COMPRESS THE WOOD FIBERS BY N0 MORE THAN 1/8".
8. PILES SHALL BE AT LEAST 8" IN DIAMETER.
9. PIERS OR PILES SHALL BE INSTALLED IN SUCH A MANNER AND SEQUENCE AS TO PREVENT DISTORTION OR DAMAGE TO PILES BEING INSTALLED OR ALREADY IN PLACE TO THE EXTENT THAT SUCH DISTORTION OR DAMAGE AFFECTS THE STRUCTURAL INTEGRITY OF THE PILES.
10. THE MAXIMUM ALLOWABLE VERTICAL LOAD CAPACITY ON EACH INDIVIDUAL PILE SHALL BE DEFINED BY THE FOLLOWING EQUATION:

$$Qa,lbf = \frac{2W_{hammer} \times H_{fall,ft}}{Sin+1}$$

WHERE:
Qa = MAXIMUM ALLOWABLE VERTICAL LOAD PER PILE
W_{hammer} = WEIGHT OF HAMMER, (LBF)
$H_{fall,ft}$ = HAMMER DROP HEIGHT, (FT)
S = AVERAGE PENETRATING DISTANCE PER BLOW DURING LAST 5 BLOWS, (IN).

11. ALL FRAMING CHANNELS SHALL CONFORM TO THE AISI DESIGN FOR COLDFORMED STEEL STRUCTURAL MEMBERS, 1986 WITH 1989 ADDENDUM.
12. THE DOCK SHALL HAVE WHITE REFLECTORS, A MINIMUM OF 6" ABOVE FULL POND ELEVATION, ON EACH SIDE OF THE FURTHERMOST CORNER OF THE EXTENSION OF THE PIER INTO THE WATER, REFLECTING LIGHT PARALLEL TO THE SHORE IN EACH DIRECTION AND DIRECTLY ACROSS THE WATERLINE WITH THE SHORE FROM EACH CORNER. WHITE REFLECTORS SHALL BE PLACED ON EACH SIDE OF THE PIER AT INTERVALS OF 15' OR LESS THAN A MINIMUM OF 6" ABOVE FULL POND ELEVATION, BEGINNING AT THE OUTERMOST EXTENSION AND EXTENDING TO THE FINAL SHORE LINE ELEVATION.
13. DESIGN LOADS:
CONCENTRATED LOAD
BOARDWALKS AND PIERS; 40 PSF OR 300 LB CONCENTRATED LOAD ON ANY AREA 2-FT SQUARE.
(REF: 2012NC BUILDING CODE SECTION 3603.3)
14. MIN. DECKING SHALL BE A PRESSURE TREATED 2" X 6" DECKING THAT MUST BE SUPPORTED BY A MIN. OF PRESSURE TREATED 2" X 8" JOIST WITH A SPACING OF NOT MORE THAN 16" O.C.

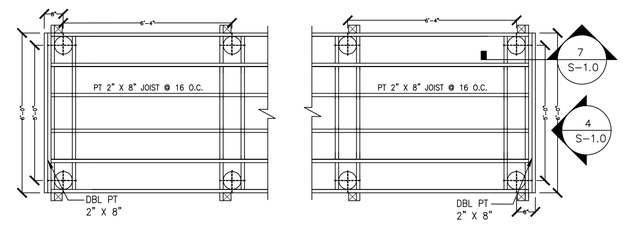

5 / S-1.0 TYPICAL BOARDWALK SECTION – 6' WIDE
SCALE: 1/2"=1'-0"

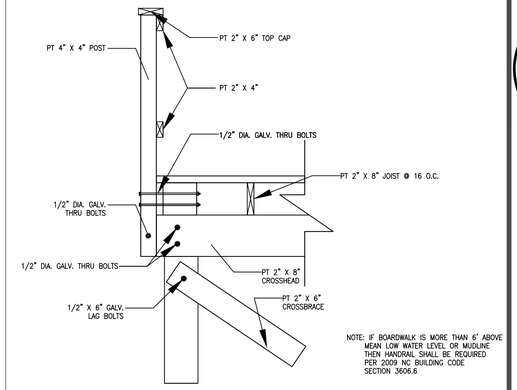

6 / S-1.0 BOARDWALK DETAIL
SCALE: 3/4"=1'-0"

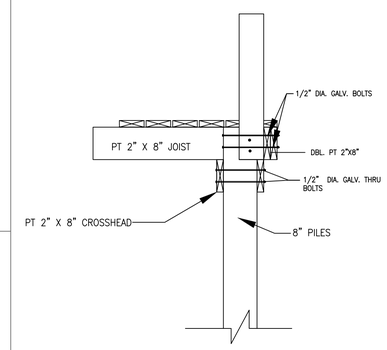

7 / S-1.0 SECTION THROUGH BOARDWALK
SCALE: 3/4"=1'-0"

TYPICAL LUMBER FASTENER SCHEDULE

FASTENERS SHOWN IS TYPICAL EXCEPT AS NOTED ON PLANS.
USE COMMON NAILS.

CONNECTION

1. JOIST TO BAND, END NAIL . . . . . (3) 3-IN GALV. PASLODE NAIL

2. WOOD DECKING TO JOIST . . . . . (2) #8, 3-IN QUICK DRIVE GALV. DECKING SCREWS

COPYRIGHT © 2014, AMICUS PARTNERS, PLLC.
ALL RIGHTS RESERVED. REPRODUCTION OR USE OF THE CONTENTS OF THIS DOCUMENT, OR ADDITIONS OR DELETIONS TO THIS DOCUMENT, IN WHOLE OR IN PART, WITHOUT WRITTEN CONSENT OF AMICUS PARTNERS, IS STRICTLY PROHIBITED. ONLY COPIES FROM THE ORIGINAL OF THIS DOCUMENT, AS APPROVED BY THE ENGINEER SHALL BE CONSIDERED TO BE VALID, TRUE COPIES.

Amicus Partners, PLLC
Firm License # P-1191
331 Coddle Market Drive
Suite 110
Concord, NC 28027
Civil Site Design
Low Impact Development
Small-Scale Building Design
Telephone: 704.573.1621
Facsimile: 704.248.7951

Seals:

NORTH CAROLINA PROFESSIONAL SEAL 032006 ENGINEER NICHOLAS R. PARKER
04-20-2016

ROB WALLACE PARK
CABARRUS COUNTY, NORTH CAROLINA

FOR
MR. KYLE BILAFER
INFRASTRUCTURE AND ASSET MANAGEMENT
CABARRUS COUNTY GOVERNMENTAL CENTER
PO BOX 707
CONCORD, NC 28026

Project Number:	17-16-010
Date:	04-20-2016
Drawn By:	CM
Checked By:	RCL

Revisions:

	04-20-16	Original Submittal

Sheet Title:

TIMBER BOARDWALK PLAN

Sheet No:

S-1.0